PUBLIC IMPROVEMENT CONSTRUCTION PLANS
SOUTH INTERSECTION OF TRAILBLAZER WAY AND BELLAVISTA ST.
IN THE MEADOWS FILIING 16 PARCELS 1, 2, 3 &4

A PARCEL OF LAND BEING A PORTION OF SECTION 33,TOWNSHIP 8 SOUTH, RANGE 67 WEST OF THE SIXTH PRINCIPAL MERIDIAN,
TOWN OF CASTLE ROCK, COUNTY OF DOUGLAS, STATE OF COLORADO
TOWN OF CASTLE ROCK PROJECT NO. CD21-0032

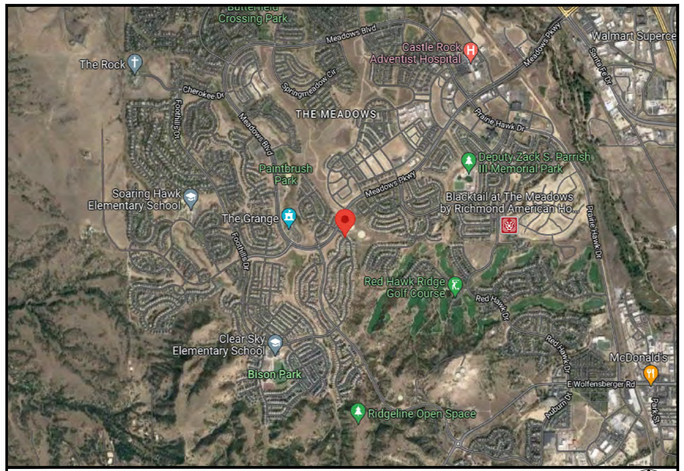

LOCATION MAP

SCALE: 1" = 2000'

0 2000 4000
SCALE IN FEET
N

G:\Shared drives\!PE Signature Requests\Logo\Customer\Verizon-Logo 2024.png

XXXX TRAILBLAZER WAY
CASTLE ROCK, CO 80109
(DOUGLAS COUNTY)

VERIZON PROJECT NAME: ALCAZAR SC
CORE CO-LOCATION

SITE DETAILS

SITE PHOTO

FROM VERIZON OFFICES: TURN RIGHT ON PARK MEADOWS DR AND CONTINUE FOR 1.3 MI. TURN LEFT ONTO LINCOLN AVE AND RIGHT ONTO I-25S. CONTINUE FOR 7.1 MI AND TAKE EXIT 185 TOWARD N. MEADOWS DR. SLIGHT RIGHT ONTO CASTLE ROCK PKWY. CONTINUE ON N MEADOWS DR FOR 1.0 MI. TURN RIGHT ONTO MEADOWS BLVD AND CONTINUE FOR 2.2 MI. TURN RIGHT ONTO TRAILBLAZER WAY AND THE DESTINATION WILL BE ON THE RIGHT.

DRIVING DIRECTIONS

LATITUDE:	**N 39° 23' 29.98"**	**(NAD '83) ***
	N 39.391664°	
LONGITUDE:	**W 104° 53' 49.83"**	**(NAD '83) ***
	W 104.897175°	
GROUND ELEVATION:	**6,310'**	**(NAVD '88) ***

***INFORMATION PROVIDED BY 1-A CERTIFICATION LETTER BY RYAN L. FIDLER, PLS DATED 09-28-23**

SITE COORDINATES

ALL WORK AND MATERIALS SHALL BE PERFORMED AND INSTALLED IN ACCORDANCE WITH THE CURRENT EDITIONS OF THE FOLLOWING CODES AS ADOPTED BY THE LOCAL GOVERNING AUTHORITIES. NOTHING IN THESE PLANS IS TO BE CONSTRUED TO PERMIT WORK NOT CONFORMING TO THE LATEST EDITIONS OF THE FOLLOWING:

1. **INTERNATIONAL BUILDING CODE (2021 EDITION) w/AMENDMENTS**
2. **INTERNATIONAL CODE COUNCIL**
3. **ANSI/TIA/EIA-222-H**
4. **NATIONAL ELECTRIC CODE (2023 EDITION)**
5. **LOCAL BUILDING CODE**

CODE COMPLIANCE

POWER COMPANY:	**CORE ELECTRIC COOPERATIVE**	**FIBER COMPANY:**	**N/A**
PHONE:	**(800) 332-9540**	**ADDRESS:**	**N/A**
ADDRESS:	**5496 N US HWY 85**	**CONTACT:**	**N/A**
CITY, STATE, ZIP:	**SEDALIA, CO 80135**	**PHONE:**	**N/A**

UTILITY INFORMATION

VERIZON SITE NAME:	**ALCAZAR SC**	**STRUCTURE TYPE:**	**30'-0" MONOPOLE**
PROJECT DESCRIPTION:	**PROPOSED SMALL CELL FACILITY TO REPLACE EXISTING CORE LIGHT POLE**	**ZONING JURISDICTION:**	**TOWN OF CASTLE ROCK**
		AREA OF CONSTRUCTION:	**49± SQ. FT. (LEASE AREA)**
SITE ADDRESS: (E911 ADDRESS TBD)	**XXXX TRAILBLAZER WAY CASTLE ROCK, CO 80109**	**ZONING:**	**MEADOWS FOURTH AMENDMENT - R-SF**

PROJECT INFORMATION

SHEET:		DESCRIPTION:	REV
1	T-1	TITLE SHEET & NOTES	D
2	C-1	SITE PLAN & VICINITY MAP	D
3	C-2	TOWER ELEVATIONS	D
4	C-3	ANTENNA & PLUMBING DETAILS	D
5	C-4	BACKPACK SHROUD	D
6	C-5	POLE DESIGN	D
7	C-6	FOUNDATION DESIGN	D
8	E-1	ELECTRICAL NOTES & UTILITY PLAN	D
9	E-2	ELECTRICAL DETAILS	D
10	E-3	GROUNDING PLAN & DETAILS	D

INDEX OF SHEETS

SITE CONSTRUCTION MANAGER:

NAME:	**VERIZON WIRELESS**
ADDRESS:	**10000 PARK MEADOWS DR.**
CITY, STATE, ZIP:	**LONE TREE, CO 80124**
CONTACT:	**SHANE THORNWALL**
PHONE:	**(720) 595-8001**

SITE APPLICANT:

NAME:	**KAPPA CONSULTING**
CONTACT:	**MARK PAIZ/HERB QUINTANA**
PHONE:	**(720) 925-5103**

SURVEYOR:

NAME:	**RLF CONSULTING**
CONTACT:	**RYAN FIDLER**
PHONE:	**(303) 500-7032**

RF ENGINEER:

NAME:	**VERIZON WIRELESS**
ADDRESS:	**10000 PARK MEADOWS DR.**
CITY, STATE, ZIP:	**LONE TREE, CO 80124**
CONTACT:	**BRYAN EICENS**
PHONE:	**(720) 595-1600**

LEAD ENGINEER:

NAME:	**TEP OPCO LLC**
ADDRESS:	**4570 IVY ST SUITE B-100**
CITY, STATE, ZIP:	**DENVER, CO 80216**
CONTACT:	**KYLE F. MILLER, P.E.**
PHONE:	**(303) 566-9914**

UTILITIES:

POWER COMPANY:	**CORE ELECTRIC COOPERATIVE**
PHONE:	**(800) 332-9540**
ADDRESS:	**5496 N US HWY 85**
CITY, STATE, ZIP:	**SEDALIA, CO 80135**

CONTACT INFORMATION

PROPOSED SMALL CELL LOCATED IN CASTLE ROCK:

- **ANTENNA MOUNTED ON INTEGRATED EQUIPMENT POLE IN THE RIGHT OF WAY (R.O.W.)**
- **ASSOCIATED UTILITIES**
- **NEW LIGHT FIXTURE TO MATCH EXISTING LIGHT HEIGHTS IN THE AREA**

PROJECT DESCRIPTION

GENERAL NOTES:

1. ALL MATERIALS, WORKMANSHIP, AND CONSTRUCTION OF PUBLIC IMPROVEMENTS SHALL MEET OR EXCEED THE STANDARDS AND SPECIFICATIONS SET FORTH IN THE TOWN OF CASTLE ROCK (TCR) MUNICIPAL CODE, TCR TECHNICAL MANUALS, AND APPLICABLE STATE AND FEDERAL REGULATIONS. WHERE THERE IS CONFLICT BETWEEN THESE PLANS AND THE TECHNICAL MANUAL OR ANY APPLICABLE STANDARDS, THE MORE STRINGENT STANDARD SHALL APPLY. ALL WORK SHALL BE INSPECTED AND APPROVED BY THE TCR CONSTRUCTION INSPECTOR.
2. THE CONTRACTOR IS SPECIFICALLY CAUTIONED THAT THE LOCATION AND/OR ELEVATION OF EXISTING UTILITIES AS SHOWN ON THESE PLANS IS BASED ON RECORDS OF THE VARIOUS UTILITY COMPANIES AND, WHERE POSSIBLE, MEASUREMENTS TAKEN IN THE FIELD. THE INFORMATION IS NOT TO BE RELIED UPON AS BEING EXACT OR COMPLETE.
3. THE CONTRACTOR MUST CALL THE LOCAL UTILITY LOCATION CENTER AT LEAST 72 HOURS BEFORE ANY EXCAVATION TO REQUEST EXACT FIELD LOCATIONS OF THE UTILITIES. PRIOR TO CONSTRUCTION, THE CONTRACTOR SHALL VERIFY PERTINENT LOCATIONS AND ELEVATIONS, ESPECIALLY AT CONNECTION POINTS AND AT POTENTIAL UTILITY CONFLICTS. IT SHALL BE THE RESPONSIBILITY OF THE CONTRACTOR TO RELOCATE ALL EXISTING UTILITIES THAT CONFLICT WITH THE PROPOSED IMPROVEMENTS SHOWN ON THESE PLANS.
4. THE CONTRACTOR SHALL COORDINATE AND COOPERATE WITH THE TOWN AND ALL UTILITY COMPANIES INVOLVED WITH REGARD TO RELOCATIONS OR ADJUSTMENTS OF EXISTING UTILITIES DURING CONSTRUCTION AND TO ASSURE THAT THE WORK IS ACCOMPLISHED IN A TIMELY FASHION AND WITH A MINIMUM DISRUPTION OF SERVICE. THE CONTRACTOR SHALL BE RESPONSIBLE FOR CONTACTING ALL PARTIES AFFECTED BY ANY DISRUPTION OF ANY UTILITY SERVICE.
5. CONTRACTOR SHALL PROVIDE A MINIMUM SEVENTY-TWO (72) HOURS NOTICE TO THE ON-SITE TCR CONSTRUCTION INSPECTOR, (720) 733-2200, PRIOR TO MAKING ANY CONNECTIONS/TIE-INS TO EXISTING WATER, SANITARY SEWER, AND/OR STORM SEWER SYSTEMS PROVIDED THAT THE UTILITY TIE-IN DOES NOT DISRUPT SERVICE TO EXISTING CR WATER CUSTOMERS. IF THE TIE-IN WILL DISRUPT UTILITY SERVICE, THEN CONTRACTOR SHALL PROVIDE A MINIMUM OF THREE (3) WEEKS NOTICE TO THE TCR CONSTRUCTION INSPECTOR TO ALLOW TIME FOR CR WATER TO PROVIDE WRITTEN NOTIFICATION TO EXISTING CUSTOMERS AFFECTED BY THE TIE-IN. ALL TOWN UTILITY TIE-INS MUST BE APPROVED BY CR WATER PRIOR TO COMMENCING WORK.
6. THE CONTRACTOR SHALL HAVE ONE (1) SIGNED COPY OF THE APPROVED PLANS, ONE (1) COPY OF THE APPROPRIATE CRITERIA AND SPECIFICATIONS, AND A COPY OF ANY PERMITS AND EXTENSION AGREEMENTS NEEDED FOR THE JOB ONSITE AT ALL TIMES.
7. THE CONTRACTOR SHALL BE RESPONSIBLE FOR ALL ASPECTS OF SAFETY INCLUDING, BUT NOT LIMITED TO, EXCAVATION, TRENCHING, SHORING, TRAFFIC CONTROL, AND SECURITY.
8. IF DURING THE CONSTRUCTION PROCESS CONDITIONS ARE ENCOUNTERED WHICH COULD INDICATE A SITUATION THAT IS NOT IDENTIFIED IN THE PLANS OR SPECIFICATIONS, THE CONTRACTOR SHALL CONTACT THE TCR CONSTRUCTION INSPECTOR IMMEDIATELY.
9. ALL REFERENCES TO ANY PUBLISHED STANDARDS SHALL REFER TO THE LATEST REVISION OF SAID STANDARD UNLESS SPECIFICALLY STATED OTHERWISE.
10. THE CONTRACTOR SHALL SUBMIT A TRAFFIC CONTROL PLAN IN ACCORDANCE WITH MUTCD TO THE APPROPRIATE RIGHT-OF-WAY AUTHORITY (TOWN, COUNTY OR STATE) FOR APPROVAL PRIOR TO ANY CONSTRUCTION ACTIVITIES WITHIN OR AFFECTING THE RIGHT-OF-WAY. THE CONTRACTOR SHALL BE RESPONSIBLE FOR PROVIDING ANY AND ALL TRAFFIC CONTROL DEVICES AS MAY BE REQUIRED BY THE CONSTRUCTION ACTIVITIES.
11. THE CONTRACTOR IS RESPONSIBLE FOR PROVIDING ALL LABOR AND MATERIALS NECESSARY FOR THE COMPLETION OF THE INTENDED IMPROVEMENTS SHOWN ON THESE DRAWINGS OR AS DESIGNATED TO BE PROVIDED, INSTALLED, OR CONSTRUCTED UNLESS SPECIFICALLY NOTED OTHERWISE.
12. THE CONTRACTOR SHALL BE RESPONSIBLE FOR RECORDING AS-BUILT INFORMATION ON A SET OF RECORD DRAWINGS KEPT ON THE CONSTRUCTION SITE AND AVAILABLE TO THE TCR CONSTRUCTION INSPECTOR AT ALL TIMES.
13. DIMENSIONS FOR LAYOUT AND CONSTRUCTION ARE NOT TO BE SCALED FROM ANY DRAWING. IF PERTINENT DIMENSIONS ARE NOT SHOWN, CONTACT THE CONSULTANT ENGINEER FOR CLARIFICATION AND ANNOTATE THE DIMENSION ON THE AS-BUILT RECORD DRAWINGS.
14. ALL INITIAL SEDIMENT CONTROL MEASURES SHALL BE INSTALLED PER THE TEMPORARY EROSION & SEDIMENT CONTROL (TESC) PLAN PRIOR TO ANY EARTH-DISTURBING ACTIVITY. ALL EROSION AND SEDIMENT CONTROL PRACTICES MUST BE MAINTAINED IN EFFECTIVE OPERATING CONDITION AT ALL TIMES. REMOVAL OF CONTROL MEASURES SHALL NOT OCCUR WITHOUT THE APPROVAL OF THE STORMWATER INSPECTOR. THE CONTRACTOR SHALL BE RESPONSIBLE FOR KEEPING ROADWAYS FREE AND CLEAR OF ALL CONSTRUCTION DEBRIS AND DIRT TRACKED FROM THE SITE. THE CONTRACTOR SHALL ALSO COMPLY WITH ALL TERMS AND CONDITIONS OF THE COLORADO CONSTRUCTION GENERAL PERMIT FOR STORMWATER DISCHARGES.
15. THE CONTRACTOR SHALL PROVIDE AN ACTION PLAN IMMEDIATELY FOLLOWING THE PRE-CONSTRUCTION MEETING DETAILING SUFFICIENT MEANS TO MITIGATE DUST ON SITE DURING OVERLOT GRADING, ROCK CRUSHING OR OTHER EARTHWORK ACTIVITIES. IF THE CONTRACTOR FAILS TO CONTROL DUST, ALL EARTH DISTURBING ACTIVITIES SHALL BE STOPPED UNTIL SUFFICIENT MEASURES ARE TAKEN TO THE TOWN'S SATISFACTION. THE CONTRACTOR SHALL ALSO COMPLY WITH ALL TERMS AND CONDITIONS OF THE COLORADO AIR QUALITY REGULATIONS FOR LAND DEVELOPMENT, AS REQUIRED.
16. THE CONTRACTOR SHALL COMPLY WITH ALL TERMS AND CONDITIONS OF THE COLORADO PERMIT FOR STORM WATER DISCHARGE, THE STORM WATER MANAGEMENT PLAN, AND THE EROSION CONTROL PLAN.
17. ALL STRUCTURAL EROSION CONTROL MEASURES SHALL BE INSTALLED AT THE LIMITS OF CONSTRUCTION PRIOR TO ANY OTHER EARTH-DISTURBING ACTIVITY. ALL EROSION CONTROL MEASURES SHALL BE MAINTAINED IN GOOD REPAIR BY THE CONTRACTOR UNTIL SUCH TIME AS THE ENTIRE DISTURBED AREA IS STABILIZED WITH HARD SURFACE OR LANDSCAPING.
18. THE CONTRACTOR SHALL SEQUENCE INSTALLATION OF UTILITIES IN SUCH A MANNER AS TO MINIMIZE POTENTIAL UTILITY CONFLICTS. IN GENERAL, STORM SEWER AND SANITARY SEWER SHOULD BE CONSTRUCTED PRIOR TO INSTALLATION OF THE WATER LINES AND DRY UTILITIES.
19. THERE SHALL BE NO SITE CONSTRUCTION ACTIVITIES ON SATURDAYS UNLESS SPECIFICALLY APPROVED BY THE TCR CONSTRUCTION INSPECTOR AND NO SITE CONSTRUCTION ACTIVITIES ON SUNDAYS OR HOLIDAYS UNLESS THERE IS PRIOR WRITTEN APPROVAL BY THE PUBLIC WORKS DIRECTOR.
20. NO SOLID OBJECT (EXCLUDING FIRE HYDRANTS AND TRAFFIC CONTROL DEVICES AND TRAFFIC SIGNS) EXCEEDING THIRTY (30) INCHES IN HEIGHT ABOVE THE FLOWLINE ELEVATION OF THE ADJACENT STREET, INCLUDING BUT NOT LIMITED TO BUILDINGS, UTILITY CABINETS, WALLS, FENCES, LANDSCAPE PLANTINGS, CROPS, CUT SLOPES, AND BERMS, SHALL BE PLACED WITHIN SIGHT DISTANCE LINES AND SIGHT DISTANCE EASEMENTS.
21. THIS PROPERTY IS LOCATED WITHIN ZONE X AS PER FEMA FIRM PANEL 08035C0301G DATED 03/16/2016.
22. BASIS OF THE BEARINGS AND COORDINATES IS THE COLORADO STATE PLANE COORDINATE SYSTEM, CENTRAL ZONE, NORTH AMERICAN DATUM OF 1983 [NAD 83(2011) EPOCH:2011] BASED ON DIFFERENTIAL GPS OBSERVATIONS PERFORMED ON 08/06/2019, TIED TO THE NATIONAL SPATIAL REFERENCE SYSTEM AND EXPRESSED IN US SURVEY FEET. ASSUMED BASIS OF BEARINGS IS THE WEST LINE OF TRACT B OF SAID PLUM CREEK FAIRWAY 13, SUBDIVISION FILING NO. 1. ASSUMED BEARING IS S01°24'20"E (M), S01°00'33"E (R1), AS SHOWN HEREON.
VERTICAL DATA BASED ON THE NORTH AMERICAN VERTICAL DATUM OF 1988 (NAVD 88) AND EXPRESSED IN US SURVEY FEET.

STREET CONSTRUCTION NOTES:

1. ALL STREET CONSTRUCTION IS SUBJECT TO THE GENERAL NOTES ON THE COVER SHEET OF THESE PLANS AS WELL AS THE STREET CONSTRUCTION NOTES LISTED HERE.
2. A PAVING SECTION DESIGN, SIGNED AND SEALED BY A COLORADO REGISTERED PROFESSIONAL ENGINEER, MUST BE SUBMITTED TO THE TCR PUBLIC WORKS DEPARTMENT FOR APPROVAL PRIOR TO ANY STREET CONSTRUCTION ACTIVITY (FULL-DEPTH ASPHALT SECTIONS ARE NOT PERMITTED AT A DEPTH GREATER THAN 8" ASPHALT). THE JOB MIX SHALL BE SUBMITTED FOR APPROVAL PRIOR TO PLACEMENT OF ANY ASPHALT.
3. WHERE PROPOSED PAVING ADJOINS EXISTING ASPHALT, THE EXISTING ASPHALT SHALL BE SAW CUT A MINIMUM DISTANCE OF 12" FROM THE EXISTING EDGE TO CREATE A CLEAN CONSTRUCTION JOINT. THE DEVELOPER SHALL BE REQUIRED TO REMOVE EXISTING PAVEMENT TO A DISTANCE WHERE A CLEAN CONSTRUCTION JOINT CAN BE MADE.
4. STREET SUBGRADES SHALL BE SCARIFIED TO A MINIMUM DEPTH OF 12" AND RE-COMPACTEDPRIOR TO SUB-BASE INSTALLATION. NO BASE MATERIAL SHALL BE LAID UNTIL THE SUBGRADE HAS BEEN INSPECTED AND APPROVED BY THE TCR CONSTRUCTION INSPECTOR.
5. VALVE BOXES ARE TO BE BROUGHT UP TO GRADE AT THE TIME OF PAVEMENT PLACEMENT OR OVERLAY. VALVE BOX ADJUSTING RINGS ARE NOT ALLOWED.

SIGNAGE AND STRIPING NOTES:

1. ALL SIGNAGE AND STRIPING IS SUBJECT TO THE GENERAL NOTES ON THE COVER SHEET OF THESE PLANS AS WELL AS THE SIGNAGE AND STRIPING NOTES LISTED HERE.
2. ALL PAINT SHALL BE 15 MIL THICK UPON INSTALLATION AND 8 MIL THICK WHEN DRY.
3. ALL PERMANENT LONGITUDINAL PAVEMENT STRIPING ON ASPHALT SURFACES (CENTERLINES, LANE LINES, BAY LINES, ETC.) SHALL BE INSTALLED USING AN APPROVED REFLECTIVE TRAFFIC PAINT OR PAVEMENT MARKING TAPE. REFLECTIVE BEADS SHALL BE APPLIED IN ACCORDANCE WITH CDOT'S STANDARD SPECIFICATIONS FOR ROAD AND BRIDGE CONSTRUCTION AND THE MANUFACTURER'S REQUIREMENTS. WHEN TAPE IS USED ON AN ASPHALT STREET, IT SHALL BE "ROLLED"INTO THE FINAL LIFT. ON CONCRETE SURFACES TAPE SHALL BE UTILIZED WITH A CONTRASTING BLACK EDGE AND GROOVED INTO THE PAVEMENT.
4. THERMO-PLASTIC APPLICATIONS SHALL BE AS SPECIFIED IN THE PLANS AND/OR PER TOWN CRITERIA.
5. ALL SURFACES THAT ACCEPT PAINT/THERMO-PLASTIC STRIPING OR PRE-FORMED MARKINGS SHALL BE FIRST SANDBLASTED AND THOROUGHLY CLEANED PRIOR TO INSTALLATION OF STRIPING OR MARKINGS.
6. ALL ARROW MARKINGS SHALL BE PRE-FORMED TAPE, THERMO-PLASTIC OR EPOXY-PAINTED.
7. STOP BARS SHALL BE 90 MIL THERMO-PLASTIC.
8. ALL ROADWAY SIGNAGE SHALL CONFORM TO THE MUTCD AND/OR THE TOWN'S CRITERIA.
9. ALL SIGNPOSTS SHALL UTILIZE BREAKAWAY ASSEMBLIES AND FASTENERS, PER THE TCR STANDARD DETAIL.

FIRE NOTES:

1. IT IS THE RESPONSIBILITY OF THE PROPERTY OWNER TO MAINTAIN DRIVE LANES FOR EMERGENCY VEHICLE INGRESS AND EGRESS, INCLUDING SNOW REMOVAL.
2. EMERGENCY VEHICLE ACCESS ROAD IS REQUIRED TO ALLOW ACCESS WITHIN 150' OF ALL EXTERIOR OF THE BUILDING BY AN APPROVED ROUTE.
3. FIRE APPARATUS ACCESS ROADS SHALL BE DESIGNED AND MAINTAINED TO SUPPORT THE IMPOSED LOADS OF FIRES APPARATUS AND SHALL BE PROVIDED WITH A SURFACE SO AS TO PROVIDE WEATHER DRIVING CAPABILITIES. ACCESS ROAD SHALL BE EITHER CONCRETE, ASPHALT, OR OTHER APPROVED ALTERNATIVE MATERIAL ACCOMPANIED WITH AN ENGINEER'S STAMP STATING THE MATERIAL WILL SUPPORT A 75,000 POUND IMPOSED LOAD.
4. FIRE HYDRANT(S) ARE REQUIRED TO BE INSTALLED AND MADE SERVICEABLE PRIOR TO COMBUSTIBLE MATERIALS BEING BROUGHT ONTO THE SITE AND DURING THE TIME OF VERTICAL CONSTRUCTION.
5. "NO PARKING FIRE LANE"SIGNS ARE REQUIRED IN AREAS THAT MEET THE FOLLOWING CRITERIA AND IN AREAS DESIGNATED BY THE FIRE PREVENTION BUREAU. SIGNS SHALL BE POSTED ON BOTH SIDES OF FIRE DEPARTMENT ACCESS ROADWAYS, PUBLIC OR PRIVATE ROADWAYS AND DRIVEWAYS LESS THAN 26 FEET WIDE. SIGNS SHALL BE POSTED ON ONE SIDE ONLY OF FIRE DEPARTMENT ACCESS ROADWAYS, PUBLIC OR PRIVATE ROADWAYS OR DRIVEWAYS BETWEEN 26 FEET WIDE AND 32 FEET WIDE. NO SIGNAGE IS REQUIRED FOR ACCESS ROADWAY FIRE DEPARTMENT ACCESS ROADWAYS, PUBLIC OR PRIVATE ROADWAYS OR DRIVEWAYS EXCEEDING 32 FEET WIDE.
6. WHEN FIRE APPARATUS ACCESS ROADS OR A WATER SUPPLY FOR FIRE PROTECTION IS REQUIRED TO BE INSTALLED, SUCH PROTECTION SHALL BE INSTALLED AND MADE SERVICEABLE PRIOR TO COMBUSTIBLE MATERIALS BEING BROUGHT ONTO THE SITE AND THE BUILDING CONSTRUCTION GOING VERTICAL.
7. TRACER WIRE SHALL BE INSTALLED ON ALL FIRE SERVICE LINES AND AT ALL FIRE HYDRANTS. REFER TO TOWN OF CASTLE ROCK STANDARD DETAILS, THE WATER LINE CONSTRUCTION NOTES, AND THE TRACER WIRE INSTALLATION NOTES LISTED HEREIN.

NOTES

PLANS PREPARED FOR:
10000 PARK MEADOWS DR, SUITE 300
LONE TREE, CO 80124
(303) 489-7836

PLANS PREPARED BY:
TEP OPCO LLC
4570 IVY ST SUITE B-100
DENVER, CO 80216
OFFICE: (303) 566-9914

PROJECT INFORMATION:
ALCAZAR SC
XXXX TRAILBLAZER WAY
CASTLE ROCK, CO 80109
(DOUGLAS COUNTY)

REV	DATE	ISSUED FOR:
D	07-24-25	PRELIMINARY
C	05-02-25	PRELIMINARY
B	11-03-23	PRELIMINARY
A	09-20-23	PRELIMINARY
7	07-27-22	100% PERMITTING CDs
6	02-23-22	100% PERMITTING CDs

DRAWN BY: DRB CHECKED BY: RPM

These plans have been reviewed by the Town of Castle Rock for concept only. The review does not imply responsibility by the undersigned Town Engineer for the Project Engineer, or the Town of Castle Rock for accuracy and correctness of the calculations. Furthermore, the review does not imply that quantities of items on the plans are the final quantities required. The review shall not be construed for any reason as acceptance of financial responsibility by the Town for additional quantities of items shown that may be required during the construction phase. All work shall be constructed in accordance with the Town of Castle Rock Municipal Code, Technical Manuals and/or other Town-approved applicable standards.

INDEMNIFICATION AND ADHERENCE TO STANDARDS STATEMENTS

SEAL:
PRELIMINARY
DO NOT USE FOR CONSTRUCTION

I hereby affirm that these final construction plans were prepared under my direct supervision, in accordance with all applicable Town of Castle Rock and State of Colorado standards and statutes, respectively; and that I am fully responsible for all design and revisions relative to said plans.

TOWN OF CASTLE ROCK APPROVAL PLANS ARE HEREBY APPROVED FOR ONE YEAR FROM DATE OF DEVELOPMENT SERVICES APPROVAL.

APPROVED BY:

DEVELOPMENT SERVICES DATE

SHEET TITLE:
TITLE SHEET & NOTES

SHEET 1 OF 11
T-1
REVISION: D
TEP #: 236764.403579

TEP is a family of companies licensed to provide different services in different jurisdictions. Depending on the jurisdiction, professional engineering and land surveying services are provided by TEP OpCo LLC, a Delaware limited liability company, TEP Engineering, PLLC, a North Carolina professional limited liability company, or M&H Engineering, PLLC, a New York professional limited liability company. General contractor services are provided by TEP DB OpCo LLC, a Delaware limited liability company. We acquire the rights to land, develop, construct, own, and operate communications infrastructure. Copyright © 2025 TEP

LEGEND

- EXIST. PROPERTY LINE
- ADJ. PROPERTY LINE
- PROPERTY CORNER
- EXIST. UTILITY POLE
- TRAFFIC SIGNAL
- TRANSFORMER
- R/W — RIGHT-OF-WAY
- OHW — OVERHEAD WIRE
- UGW — UNDERGROUND WIRE
- UGG — UNDERGROUND GAS
- UGF — UNDERGROUND FIBER
- UGT — UNDERGROUND TELCO
- WP — WATER PIPE
- EDGE OF PAVEMENT
- STREET SIGN
- LIGHT POLE
- FIRE HYDRANT
- MAN HOLE (FIBER, SANITARY, STORM, TELCO, WATER)
- ELECTRICAL PULL BOX
- IRRIGATION CONTROL VALVE
- GAS VALVE
- WATER METER
- WATER VALVE

1-A COORDINATES

LATITUDE:	N XX° XX' XX.XX" (NAD '83) N XX.XXXXXX°
LONGITUDE:	W XXX° XX' XX.XX" (NAD '83) W XXX.XXXXXX°
GROUND ELEVATION:	X,XXX' (NAVD '88)

I:\Logan\Customer-GIS Cad Before You Dig\dg

SITE MAP

SCALE: 1" = 500'

0 500 1000 SCALE IN FEET

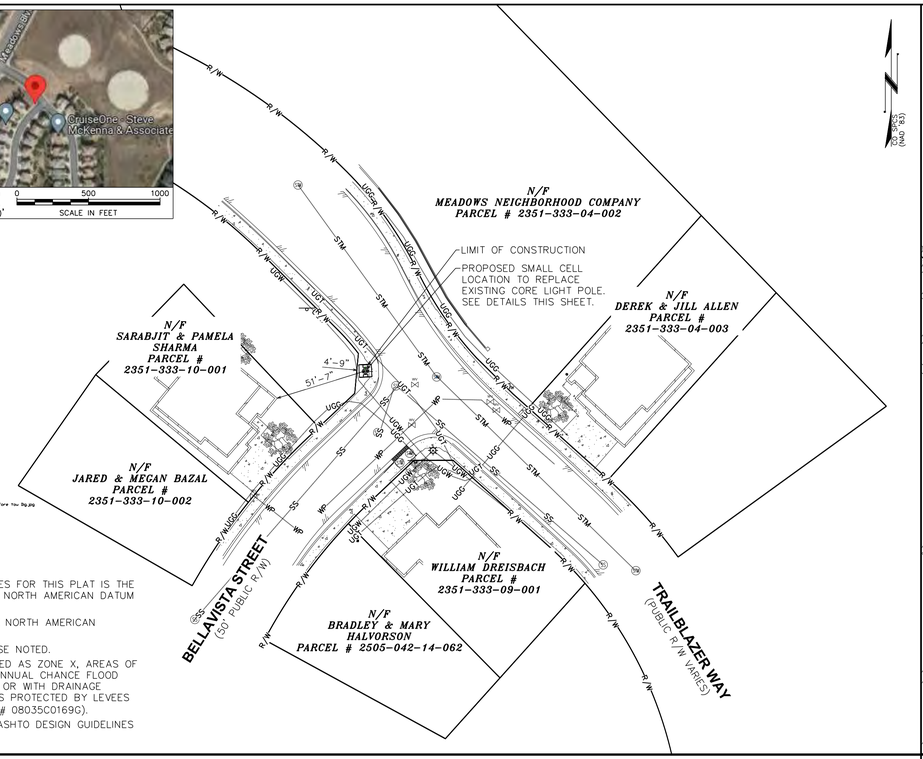

SITE MAP

SCALE: 1" = 40'

0 40 80 SCALE IN FEET

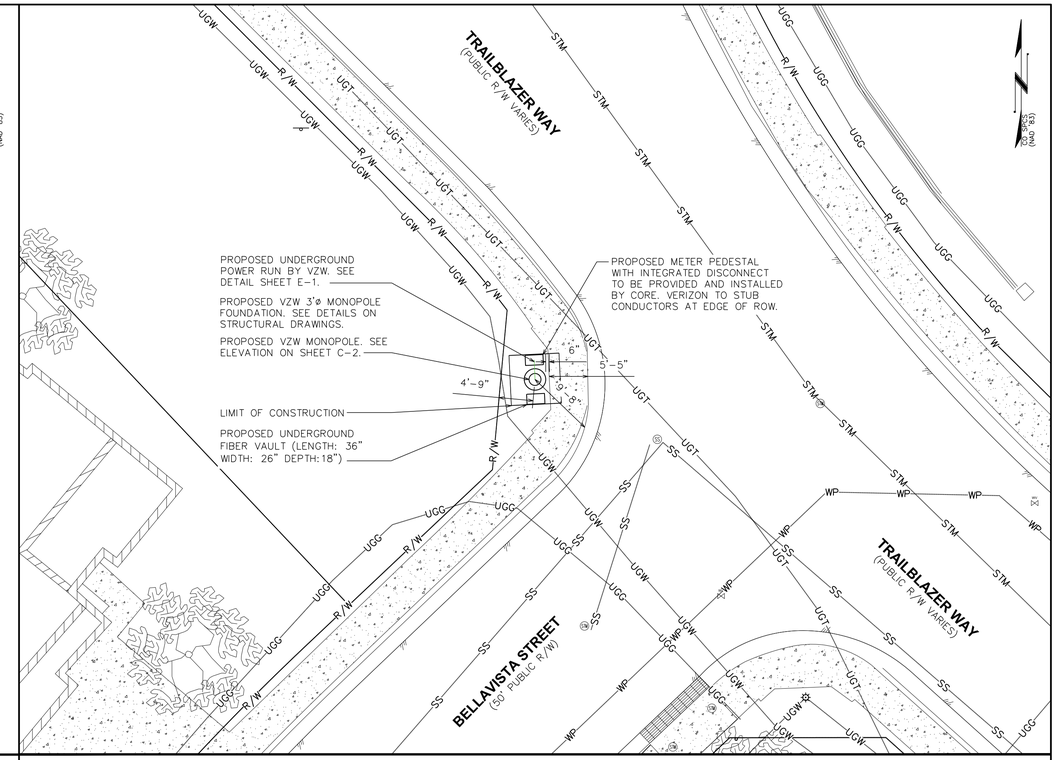

ENLARGED SITE PLAN

SCALE: 1" = 10'

0 10 20 SCALE IN FEET

NOTES:

1. THE BASIS OF THE MERIDIANS AND COORDINATES FOR THIS PLAT IS THE COLORADO STATE PLANE COORDINATE SYSTEM, NORTH AMERICAN DATUM 1983 (NAD83).
2. VERTICAL INFORMATION SHOWN, BASED ON THE NORTH AMERICAN VERTICAL DATUM OF 1988 (NAVD 88).
3. ALL DISTANCES ARE GROUND UNLESS OTHERWISE NOTED.
4. THE TOWER IS LOCATED IN AN AREA DESIGNATED AS ZONE X, AREAS OF 0.2% ANNUAL CHANCE FLOOD; AREAS OF 1% ANNUAL CHANCE FLOOD WITH AVERAGE DEPTHS OF LESS THAN 1 FOOT OR WITH DRAINAGE AREAS LESS THAN 1 SQUARE MILE; AND AREAS PROTECTED BY LEVEES FROM 1% ANNUAL CHANCE FLOOD (FEMA MAP # 08035C0169G).
5. PROPOSED SMALL CELL TOWER ADHERES TO AASHTO DESIGN GUIDELINES AND SETBACKS

SUMMARY OF LICENSEE PLANS

WCF ID NUMBER	ALCAZAR SC
ROAD NAME OR INTERSECTION QUADRANT	TRAILBLAZER WAY & BELLAVISTA ST.
GIS COORDINATE LATITUDE	39° 23' 29.98" N (39.391664°)
GIS COORDINATE LONGITUDE	-104° 53' 49.83" W (-104.897175°)
EXISTING POLE TYPE	STREETLIGHT W/ SHOEBOX STYLE LIGHT FIXTURE
NEW POLE TYPE	SMALL CELL EQUIPMENT POLE W/ SHOEBOX LIGHT FIXTURE
EXISTING POLE OWNER	N/A
NEW POLE OWNER	CORE
EXISTING POLE HEIGHT	N/A
NEW POLE HEIGHT	30'-0"
GROUND / UNDERGROUND EQUIPMENT	UNDERGROUND VAULT
DISTANCE TO POLE ON SAME SIDE OF ROAD	290'-10"
DISTANCE TO POLE ON OPPOSITE SIDE OF ROAD	54'-9"
HEIGHT OF SHORTEST SURROUNDING POLE	22'-0"
MLA APPROVED DESIGN STANDARD	YES - CORE & CITY OF CASTLE ROCK STREET LIGHT POLE

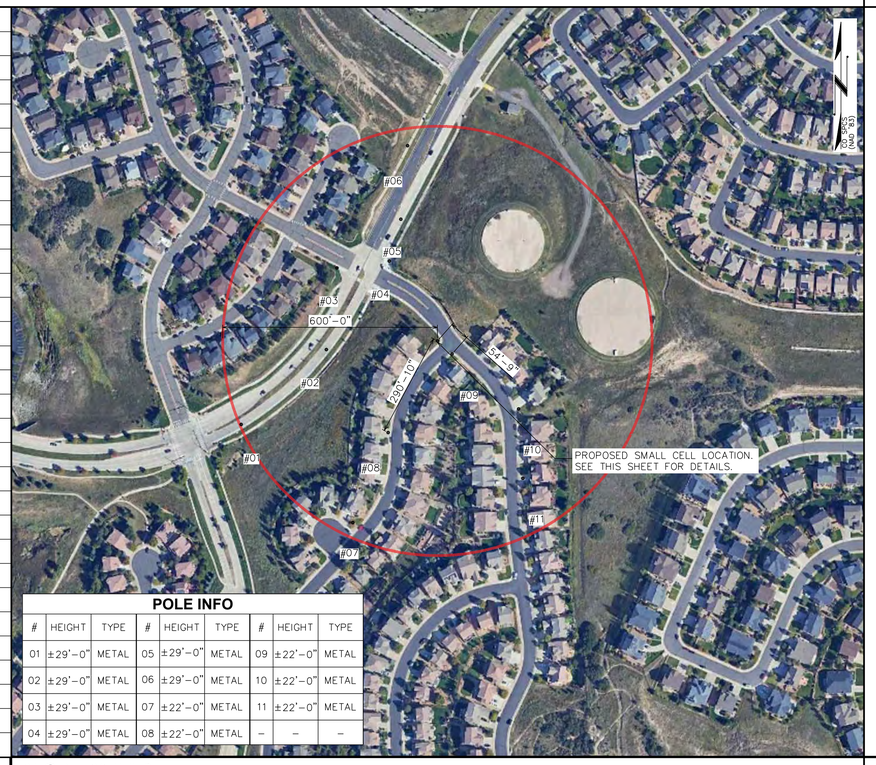

POLE INFO

#	HEIGHT	TYPE	#	HEIGHT	TYPE	#	HEIGHT	TYPE
01	±29'-0"	METAL	05	±29'-0"	METAL	09	±22'-0"	METAL
02	±29'-0"	METAL	06	±29'-0"	METAL	10	±22'-0"	METAL
03	±29'-0"	METAL	07	±22'-0"	METAL	11	±22'-0"	METAL
04	±29'-0"	METAL	08	±22'-0"	METAL	-	-	-

VICINITY MAP

SCALE: 1" = 200'

0 200 400 SCALE IN FEET

A&E FIRM NOTES:

1. ALL REFERENCES TO OWNER IN THESE DOCUMENTS SHALL BE CONSIDERED VERIZON OR ITS DESIGNATED REPRESENTATIVE.
2. ALL WORK PRESENTED ON THESE DRAWINGS MUST BE COMPLETED BY THE CONTRACTOR UNLESS NOTED OTHERWISE. THE CONTRACTOR MUST HAVE CONSIDERABLE EXPERIENCE IN PERFORMANCE OF WORK SIMILAR TO THAT DESCRIBED HEREIN. BY ACCEPTANCE OF THIS ASSIGNMENT, THE CONTRACTOR IS ATTESTING THAT HE DOES HAVE SUFFICIENT EXPERIENCE AND ABILITY, THAT HE IS KNOWLEDGABLE OF THE WORK TO BE PERFORMED AND THAT HE IS PROPERLY LICENSED AND PROPERLY REGISTERED TO DO THIS WORK IN THE STATE OF COLORADO.
3. STRUCTURE IS DESIGNED IN ACCORDANCE WITH ANSI/TIA/EIA-222-H, 2017. THIS CONFORMS TO THE REQUIREMENTS OF THE INTERNATIONAL BUILDING CODE, 2021 EDITION.
4. WORK SHALL BE COMPLETED IN ACCORDANCE WITH THE INTERNATIONAL BUILDING CODE, 2021 EDITION, AND MOST RECENT DENVER BUILDING CODE AMENDMENTS.
5. UNLESS SHOWN OR NOTED OTHERWISE ON THE CONTRACT DRAWINGS, OR IN THE SPECIFICATIONS, THE FOLLOWING NOTES SHALL APPLY TO THE MATERIALS LISTED HEREIN, AND TO THE PROCEDURES TO BE USED ON THIS PROJECT.
6. ALL HARDWARE ASSEMBLY MANUFACTURER'S INSTRUCTIONS SHALL BE FOLLOWED EXACTLY AND SHALL SUPERCEDE ANY CONFLICTING NOTES ENCLOSED HEREIN.
7. IT IS THE CONTRACTOR'S SOLE RESPONSIBILITY TO DETERMINE ERECTION PROCEDURE AND SEQUENCE TO ENSURE THE SAFETY OF THE STRUCTURE AND IT'S COMPONENT PARTS DURING ERECTION AND/OR FIELD MODIFICATIONS. THIS INCLUDES, BUT IS NOT LIMITED TO, THE ADDITION OF TEMPORARY BRACING, GUYS OR TIE DOWNS THAT MAY BE NECESSARY. SUCH MATERIAL SHALL BE REMOVED AND SHALL REMAIN THE PROPERTY OF THE CONTRACTOR AFTER THE COMPLETION OF THE PROJECT.
8. ALL DIMENSIONS, ELEVATIONS, AND EXISTING CONDITIONS SHOWN ON THE DRAWINGS SHALL BE FIELD VERIFIED BY THE CONTRACTOR PRIOR TO BEGINNING ANY MATERIALS ORDERING, FABRICATION OR CONSTRUCTION WORK ON THIS PROJECT. CONTRACTOR SHALL NOT SCALE CONTRACT DRAWINGS IN LIEU OF FIELD VERIFICATIONS. ANY DISCREPANCIES SHALL BE IMMEDIATELY BROUGHT TO THE ATTENTION OF THE OWNER AND THE OWNER'S ENGINEER. THE DISCREPANCIES MUST BE RESOLVED BEFORE THE CONTRACTOR IS TO PROCEED WITH THE WORK. THE CONTRACT DOCUMENTS DO NOT INDICATE THE METHOD OF CONSTRUCTION. THE CONTRACTOR SHALL SUPERVISE AND DIRECT THE WORK AND SHALL BE SOLELY RESPONSIBLE FOR ALL CONSTRUCTION MEANS, METHODS, TECHNIQUES, SEQUENCES, AND PROCEDURES. OBSERVATION VISITS TO THE SITE BY THE OWNER AND/OR THE ENGINEER SHALL NOT INCLUDE INSPECTION OF THE PROTECTIVE MEASURES OR THE PROCEDURES.
9. ALL MATERIALS AND EQUIPMENT FURNISHED SHALL BE NEW AND OF GOOD QUALITY, FREE FROM FAULTS AND DEFECTS AND IN CONFORMANCE WITH THE CONTRACT DOCUMENTS. ANY AND ALL SUBSTITUTIONS MUST BE PROPERLY APPROVED AND AUTHORIZED IN WRITING BY THE OWNER AND ENGINEER PRIOR TO INSTALLATION. THE CONTRACTOR SHALL FURNISH SATISFACTORY EVIDENCE AS TO THE KIND AND QUALITY OF THE MATERIALS AND EQUIPMENT BEING SUBSTITUTED.
10. THE CONTRACTOR SHALL BE RESPONSIBLE FOR INITIATING, MAINTAINING, AND SUPERVISING ALL SAFETY PRECAUTIONS AND PROGRAMS IN CONNECTION WITH THE WORK. THE CONTRACTOR IS RESPONSIBLE FOR ENSURING THAT THIS PROJECT AND RELATED WORK COMPLIES WITH ALL APPLICABLE LOCAL, STATE, AND FEDERAL SAFETY CODES AND REGULATIONS GOVERNING THIS WORK.
11. ACCESS TO THE PROPOSED WORK SITE MAY BE RESTRICTED. THE CONTRACTOR SHALL COORDINATE INTENDED CONSTRUCTION ACTIVITY, INCLUDING WORK SCHEDULE AND MATERIALS ACCESS, WITH THE RESIDENT LEASING AGENT FOR APPROVAL.
12. BILL OF MATERIALS AND PART NUMBERS LISTED ON CONSTRUCTION DRAWINGS ARE INTENDED TO AID CONTRACTOR. CONTRACTOR SHALL VERIFY PARTS AND QUANTITIES WITH MANUFACTURER PRIOR TO BIDDING AND/OR ORDERING MATERIALS.
13. ALL PERMITS THAT MUST BE OBTAINED ARE THE RESPONSIBILITY OF THE CONTRACTOR. THE CONTRACTOR WILL BE RESPONSIBLE FOR ABIDING BY ALL CONDITIONS AND REQUIREMENTS OF THE PERMITS.
14. 24 HOURS PRIOR TO THE BEGINNING OF ANY CONSTRUCTION, THE CONTRACTOR MUST NOTIFY THE APPLICABLE JURISDICTIONAL (STATE, COUNTY OR CITY) ENGINEER.
15. THE CONTRACTOR SHALL REWORK (DRY, SCARIFY, ETC.) ALL MATERIAL NOT SUITABLE FOR SUBGRADE IN ITS PRESENT STATE. AFTER REWORKING, IF THE MATERIAL REMAINS UNSUITABLE, THE CONTRACTOR SHALL UNDERCUT THIS MATERIAL AND REPLACE WITH APPROVED MATERIAL. ALL SUBGRADES SHALL BE PROOFROLLED WITH A FULLY LOADED TANDEM AXLE DUMP TRUCK PRIOR TO PAVING. ANY SOFTER MATERIAL SHALL BE REWORKED OR REPLACED.
16. THE CONTRACTOR IS REQUIRED TO MAINTAIN ALL PIPES, DITCHES, AND OTHER DRAINAGE STRUCTURES FREE FROM OBSTRUCTION UNTIL WORK IS ACCEPTED BY THE OWNER. THE CONTRACTOR IS RESPONSIBLE FOR ANY DAMAGES CAUSED BY FAILURE TO MAINTAIN DRAINAGE STRUCTURE IN OPERABLE CONDITION.
17. ALL MATERIALS AND WORKMANSHIP SHALL BE WARRANTED FOR ONE YEAR FROM ACCEPTANCE DATE.
18. THE OWNER SHALL HAVE A SET OF APPROVED PLANS AVAILABLE AT THE SITE AT ALL TIMES WHILE WORK IS BEING PERFORED. A DESIGNATED RESPONSIBLE EMPLOYEE SHALL BE RESPONSIBLE FOR CONTACT BY GOVERNING AGENCY INSPECTORS.

A&E FIRM STRUCTURAL STEEL NOTES:

1. THE FABRICATION AND ERECTION OF STRUCTURAL STEEL SHALL CONFORM TO THE AISC SPECIFICATIONS AND MANUAL OF STEEL CONSTRUCTION, 14TH EDITION.
2. UNLESS OTHERWISE NOTED, ALL STRUCTURAL ELEMENTS SHALL CONFORM TO THE FOLLOWING REQUIREMENTS:
   A. STRUCTURAL STEEL, ASTM DESIGNATION A36 OR A992 GR50.
   B. ALL BOLTS, ASTM A325 TYPE 1 GALVANIZED HIGH STRENGTH BOLTS.
   C. ALL NUTS, ASTM A563 CARBON AND ALLOY STEEL NUTS.
   D. ALL WASHERS, ASTM F436 HARDENED STEEL WASHERS.
3. ALL CONNECTIONS NOT FULLY DETAILED ON THESE PLANS SHALL BE DETAILED BY THE STEEL FABRICATOR IN ACCORDANCE WITH AISC SPECIFICATIONS AND MANUAL OF STEEL CONSTRUCTION, 14TH EDITION.
4. HOLES SHALL NOT BE FLAME CUT THRU STEEL UNLESS APPROVED BY THE ENGINEER.
5. HOT-DIP GALVANIZE ALL ITEMS UNLESS OTHERWISE NOTED, AFTER FABRICATION WHERE PRACTICABLE. GALVANIZING: ASTM A123, ASTM A153/A153M OR ASTM A653/A653M, G90, AS APPLICABLE.
6. REPAIR DAMAGED SURFACES WITH GALVANIZING REPAIR METHOD AND PAINT CONFORMING TO ASTM A780 OR BY APPLICATION OF STICK OR THICK PASTE MATERIAL SPECIFICALLY DESIGNED FOR REPAIR OF GALVANIZING. CLEAN AREAS TO BE REPAIRED AND REMOVE SLAG FROM WELDS. HEAT SURFACES TO WHICH STICK OR PASTE MATERIAL IS APPLIED, WITH A TORCH TO A TEMPERATURE SUFFICIENT TO MELT THE METALLICS IN STICK OR PASTED; SPREAD MOLTEN MATERIAL UNIFORMLY OVER SURFACES TO BE COATED AND WIPE OFF EXCESS MATERIAL.
7. A NUT LOCKING DEVICE SHALL BE INSTALLED ON ALL PROPOSED AND/OR REPLACED BOLTS.
8. ALL PROPOSED AND/OR REPLACED BOLTS SHALL BE OF SUFFICIENT LENGTH TO EXCLUDE THE THREADS FROM THE SHEAR PLANE.
9. ALL PROPOSED AND/OR REPLACED BOLTS SHALL BE OF SUFFICIENT LENGTH SUCH THAT THE END OF THE BOLT BE AT LEAST FLUSH WITH THE FACE OF THE NUT. IT IS NOT PERMITTED FOR THE BOLT END TO BE BELOW THE FACE OF THE NUT AFTER TIGHTENING IS COMPLETED.
10. ALL ASSEMBLY BOLTS ARE TO BE TIGHTENED TO A "SNUG TIGHT" CONDITION AS DEFINED IN SECTION 8.1 OF THE AISC, "SPECIFICATION FOR STRUCTURAL JOINTS USING ASTM A325 OR A490 BOLTS", DATED JUNE 30, 2004.
11. FLAT WASHERS ARE TO BE INSTALLED WITH BOLTS OVER SLOTTED HOLES.
12. DO NOT OVER TORQUE ASSEMBLY BOLTS. GALVANIZING ON BOLTS, NUTS, AND STEEL PARTS ;MAY ACT AS A LUBRICANT, THUS OVER TIGHTENING MAY OCCUR AND MAY CAUSE BOLTS TO CRACK AND SNAP OFF.
13. PAL NUTS ARE TO BE INSTALLED AFTER NUTS ARE TIGHT AND WITH EDGE LIP OUT. PAL NUTS ARE NOT REQUIRED WHEN SELF-LOCKING NUTS ARE PROVIDED.
14. GALVANIZED ASTM A325 BOLTS SHALL NOT BE REUSED.
15. WELDING SHALL BE PERFORMED IN ACCORDANCE WITH AMERICAN WELDING SOCIETY (AWS) D1.1-2010 STRUCTURAL WELDING CODE - STEEL.

A&E FIRM NOTES

SCALE: N.T.S.

PLANS PREPARED FOR:

I:\Sprint Projects\Sprint Projects\Templates\Templates\dwg

10000 PARK MEADOWS DR, SUITE 300
LONE TREE, CO 80124
(303) 489-7836

PLANS PREPARED BY:

I:\Logan\TEP Main logo -color.dwg

TEP OPCO LLC
4570 IVY ST SUITE B-100
DENVER, CO 80216
OFFICE: (303) 566-9914

PROJECT INFORMATION:

ALCAZAR SC

XXXX TRAILBLAZER WAY,
CASTLE ROCK, CO 80109
(DOUGLAS COUNTY)

REV	DATE	DRAWN BY: DRB
D	07-24-25	PRELIMINARY
C	05-02-25	PRELIMINARY
B	11-03-23	PRELIMINARY
A	09-20-23	PRELIMINARY
7	07-27-22	100% PERMITTING CDs
6	02-23-22	100% PERMITTING CDs
		ISSUED FOR:
		CHECKED BY: RPM

These plans have been reviewed by the Town of Castle Rock for concept only. The review does not imply responsibility by the reviewing department, the Town Engineer, or the Town of Castle Rock for accuracy and correctness of the calculations. Furthermore, the review does not imply that quantities of items on the plans are the final quantities required. The review shall not be construed for any reason as acceptance of financial responsibility by the Town for additional quantities of items shown that may be required during the construction phase. All work shall be constructed in accordance with the Town of Castle Rock Municipal Code, Technical Manuals and/or other Town-approved applicable standards.

INDEMNIFICATION AND ADHERENCE TO STANDARDS STATEMENTS

SEAL:

PRELIMINARY
DO NOT USE FOR CONSTRUCTION

I hereby affirm that these final construction plans were prepared under my direct supervision, in accordance with all applicable Town of Castle Rock and State of Colorado laws, ordinances, regulations, standards and I am fully responsible for all design and revisions relative to said plans.

TOWN OF CASTLE ROCK APPROVAL PLANS ARE HEREBY APPROVED FOR ONE YEAR FROM DATE OF DEVELOPMENT SERVICES APPROVAL

APPROVED BY:

DEVELOPMENT SERVICES DATE

SHEET TITLE:

SITE PLAN & VICINITY MAP

SHEET 2 OF 11

C-1

REVISION: D

TEP #: 23G7G4.403579

TEP is a family of companies licensed to provide different services in different jurisdictions. Depending on the jurisdiction, professional engineering and land surveying services are provided by TEP OpCo LLC, a Delaware limited liability company. TEP Engineering, PLLC, a New York professional limited liability company, or M&H Engineering, PLLC, a North Carolina professional limited liability company. Depending on the jurisdiction, professional engineering and land surveying services are provided by TEP OpCo LLC, a Delaware limited liability company. We acquire the requisite licenses in each state. Additional information can be obtained from the company.

NOTE:

1. CONTRACTOR TO PAINT EQUIPMENT SHROUD, POLE, AND ANTENNA JET BLACK RAL #9005 TO MATCH EXISTING STREET POLES AND LIGHT FIXTURES IN THE SURROUNDING AREA.
2. TOP OF STRUCTURE NOT TO EXCEED 30'-0".
3. MAXIMUM ANTENNA VOLUME NOT TO EXCEED 3 CUBIC FEET
4. RETURN NEW CONSTRUCTION AREA TO PRE-CONSTRUCTION CONDITIONS AFTER INSTALLATION.
5. LOCATE AND AVOID EXISTING UNDERGROUND UTILITIES. POTHOLE AS REQUIRED TO DETERMINE EXACT LOCATION AND DEPTH.
6. PROPOSED SMALL CELL TOWER ADHERES TO AASHTO DESIGN GUIDELINES AND SETBACKS

RF WARNING

(2) PROPOSED RF SIGNAGE BY VZW TO BE AT LEAST 5' BELOW BOTTOM TIP OF NEAREST ANTENNA. ONE SIGNAGE TO BE STREET FACING AND THE OTHER ON OPPOSITE SIDE OF POLE.

VERIZON IDENTIFICATION

VERIZON TO INSTALL A PERMANENT PLAQUE AT 3' TO 6' IN HEIGHT DISPLAYING: POLE OWNERSHIP, UNIQUE POLE IDENTIFICATION NUMBER MATCHING POLE CODE FROM MASTER TRACKER, AND A CONTACT PHONE NUMBER FOR POLE OWNER.

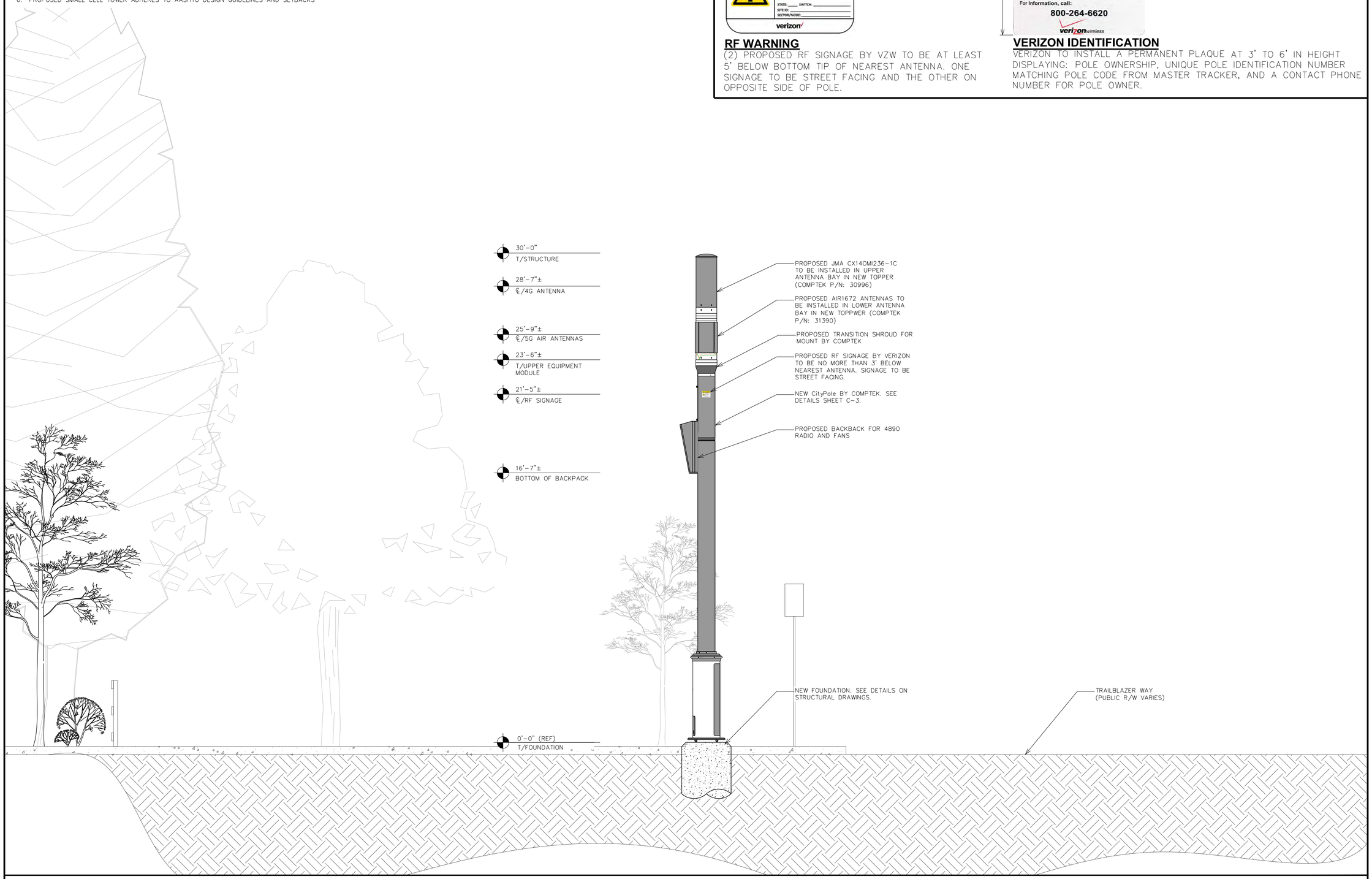

PROPOSED FRONT ELEVATION (LOOKING NORTHWEST)

SCALE: 3/8" = 1'-0"

0 2 4
SCALE IN FEET

PLANS PREPARED FOR:

10000 PARK MEADOWS DR, SUITE 300
LONE TREE, CO 80124
(303) 489-7836

PLANS PREPARED BY:

TEP OPCO LLC
4570 IVY ST SUITE B-100
DENVER, CO 80216
OFFICE: (303) 566-9914

PROJECT INFORMATION:

ALCAZAR SC

XXXX TRAILBLAZER WAY
CASTLE ROCK, CO 80109
(DOUGLAS COUNTY)

REV	DATE	
D	07-24-25	PRELIMINARY
C	05-02-25	PRELIMINARY
B	11-03-23	PRELIMINARY
A	09-20-23	PRELIMINARY
7	07-27-22	100% PERMITTING CD's
6	02-23-22	100% PERMITTING CD's

ISSUED FOR:

DRAWN BY: DRB CHECKED BY: RPM

These plans have been reviewed by the Town of Castle Rock for concept only. The review does not imply responsibility by the reviewing department, the Town Engineer, or the Town of Castle Rock for accuracy and correctness of the calculations. Furthermore, the review does not imply that quantities of items on the plans are the final quantities required. The review shall not be construed for any reason as acceptance of financial responsibility by the Town for additional quantities of items shown that may be required during the construction phase. All work shall be constructed in accordance with the Town of Castle Rock Municipal Code, Technical Manuals and/or other Town-approved applicable standards.

INDEMNIFICATION AND ADHERENCE TO STANDARDS STATEMENTS

SEAL:

PRELIMINARY
DO NOT USE FOR CONSTRUCTION

I hereby affirm that these final construction plans were prepared under my direct supervision, in accordance with all applicable Town of Castle Rock and State of Colorado laws, ordinances, regulations, standards and guidelines. I am fully responsible for all design and revisions relative to said plans.

TOWN OF CASTLE ROCK APPROVAL PLANS ARE HEREBY APPROVED FOR ONE YEAR FROM DATE OF DEVELOPMENT SERVICES APPROVAL

APPROVED BY:

DEVELOPMENT SERVICES DATE

SHEET TITLE:

TOWER ELEVATION

SHEET 3 OF 11

C-2

REVISION: D

TEP #: 23G7G4.403579

TEP is a family of companies licensed to provide different services in different jurisdictions. Depending on the jurisdiction, professional engineering and land surveying services are provided by TEP OpCo LLC, a Delaware limited liability company, TEP Engineering, PLLC, a New York professional limited liability company, or M&H Engineering, PLLC, a North Carolina professional limited liability company. General contractor services are provided by TEP OpCo LLC, a Delaware limited liability company. We acquire the requisite licenses in each state. Additional information can be obtained from the company.

ANTENNA/COAX SCHEDULE

SECTOR/ POSITION	AZIMUTH	ANTENNA SPECIFICATIONS	ELEC. D-TILT	MECH. D-TILT	CABLE SIZE	CABLE LENGTH
N/A	N/A	OMNI (2.97 FT^3)	0°	0°	(8) ¼" COAX (4) ¼" COAX	5' 30'
ALPHA	SEE RFDS	PANEL ANTENNAS (0.51 FT^3)	0°	0°	(3) POWER (3) FIBER	30'
BETA	SEE RFDS		0°	0°		
GAMMA	SEE RFDS		0°	0°		

EQUIPMENT WEIGHT TABLE (4G/mmW POLE TOPPER)

EPA (SQUARE FEET)	SHROUD WEIGHT (POUNDS)	VERIZON ANTENNA AND EQUIPMENT WEIGHT (POUNDS)	TOTAL WEIGHT (POUNDS)
TBD	TBD	TBD	TBD

EQUIPMENT VOLUME TABLE

DESCRIPTION	INCLUDES	VOLUME (FT^3)
ANTENNA(S)	(1) 14"ø x 33" H OMNI (3) 21.2"H x 8.1"W x 5.1"D PANEL	2.94 FT^3 0.51 FT^3 (EA.)
ASSOCIATED EQUIPMENT	EQUIPMENT, RADIO(S), POWER PANEL	12.02 FT^3
UTILITY	DISCONNECT, METER, FIBER FRONTHAUL	2.41 FT^3

ANTENNA/COAX SCHEDULE
SCALE: N.T.S.

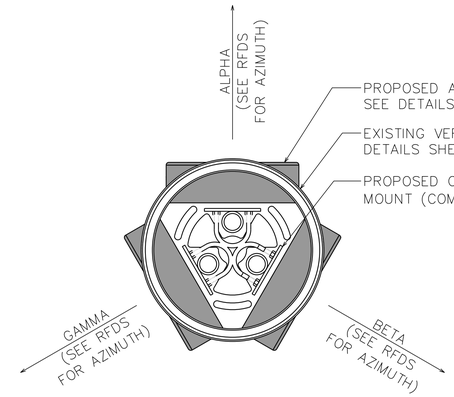

LOWER ANTENNA MOUNT
SCALE: N.T.S.

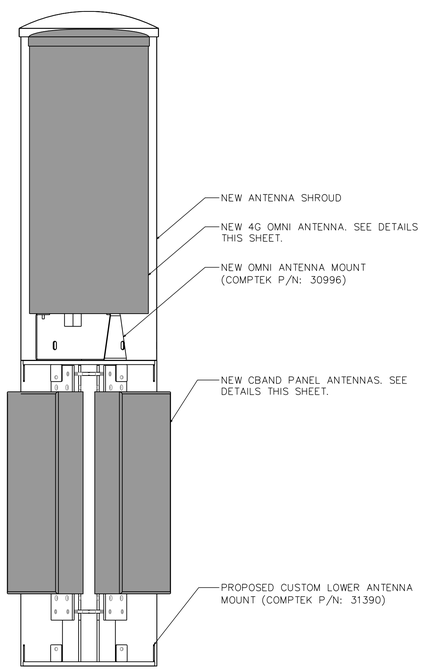

ANTENNA MOUNTING ELEVATION
SCALE: N.T.S.

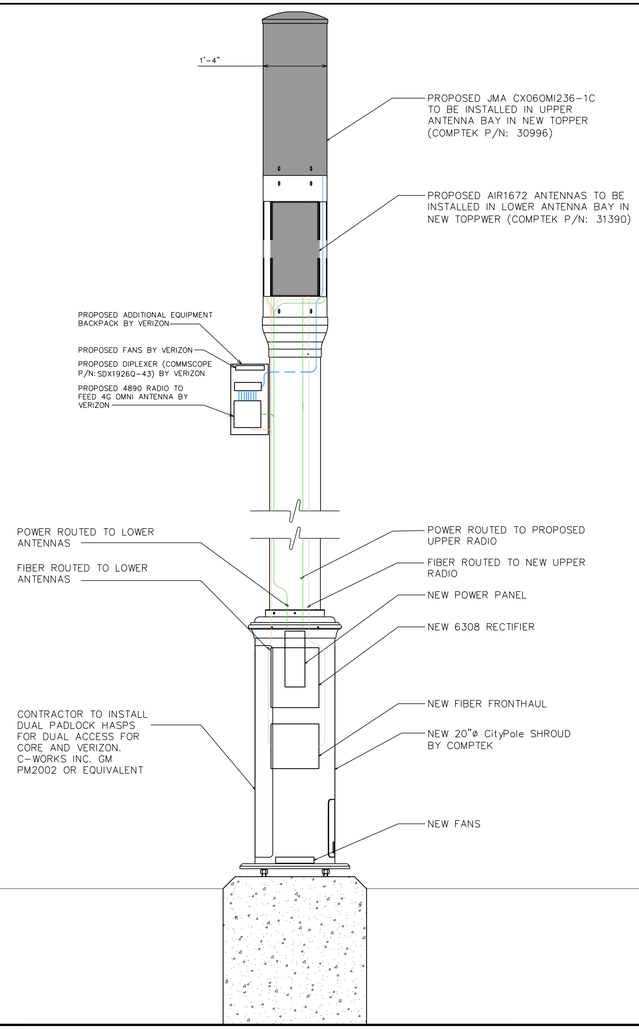

POLE DETAILS
SCALE: N.T.S.

NOTES:

1. DAISY CHAIN CONFIGURATION SUPPORT CASCADING AIR1672 WHILE USING SINGLE 10G FIBER FROM BACKHAUL.
2. MAX 3 UNIT OF AIR1672 CASCADED SUPPORT NOW USING SINGLE 10G FIBER WHICH TERMINTATED TO TNB PORT OF MASTER AIR1672.

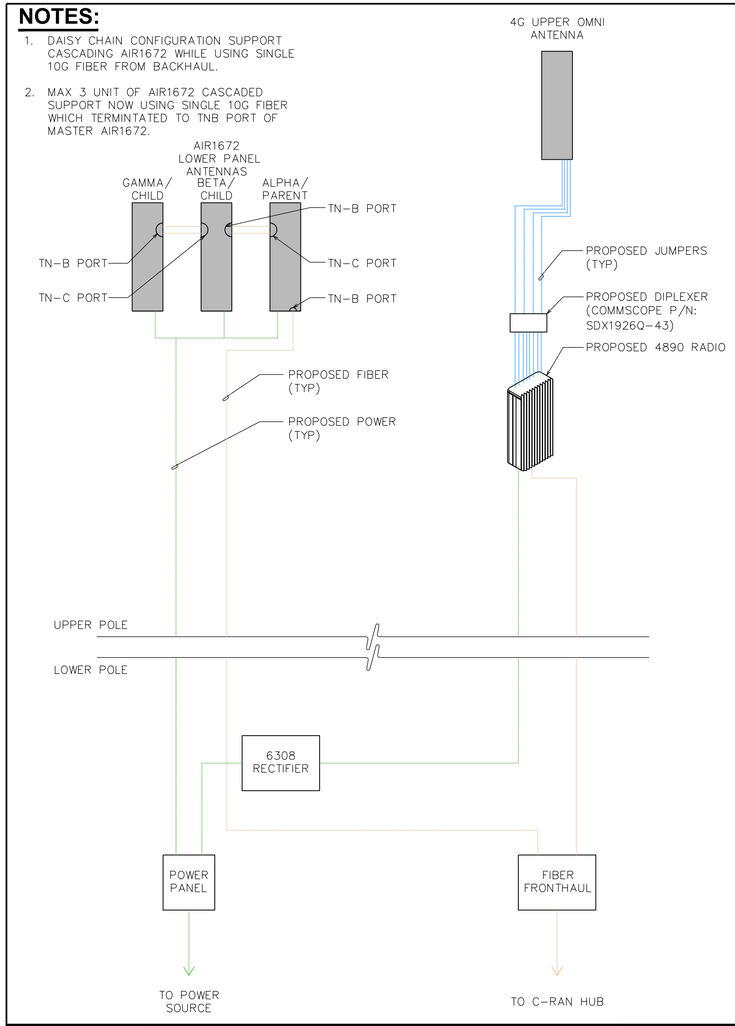

PLUMBING DIAGRAM
SCALE: N.T.S.

PLANS PREPARED FOR:
S:\Shared drives\TEP Sprint Repository\Templates\Cover\cover-tmpl.dwg
10000 PARK MEADOWS DR, SUITE 300
LONE TREE, CO 80124
(303) 489-7836

PLANS PREPARED BY:
I:\Logos\TEP main logo -color.png
TEP OPCO LLC
4570 IVY ST SUITE B-100
DENVER, CO 80216
OFFICE: (303) 566-9914

PROJECT INFORMATION:
ALCAZAR SC
XXXX TRAILBLAZER WAY
CASTLE ROCK, CO 80109
(DOUGLAS COUNTY)

REV	DATE	ISSUED FOR:
D	07-24-25	PRELIMINARY
C	05-02-25	PRELIMINARY
B	11-03-23	PRELIMINARY
A	09-20-23	PRELIMINARY
7	07-27-22	100% PERMITTING CD's
6	02-23-22	100% PERMITTING CD's

DRAWN BY: DRB CHECKED BY: RPM

These plans have been reviewed by the Town of Castle Rock for concept only. The review does not imply responsibility by the Engineer of Record, nor the Town Engineer, or the Town of Castle Rock for accuracy and correctness of the calculations. Furthermore, the review does not imply that quantities of items on the plans are the final quantities required. The review shall not be construed for any reason as acceptance of financial responsibility by the Town for additional quantities of items shown that may be required during the construction phase. All work shall be constructed in accordance with the Town of Castle Rock Municipal Code, Technical Manuals and/or other Town-approved applicable standards.

INDEMNIFICATION AND ADHERENCE TO STANDARDS STATEMENTS

SEAL:
PRELIMINARY
DO NOT USE FOR CONSTRUCTION

I hereby affirm that these final construction plans were prepared under my direct supervision, in accordance with all applicable Town of Castle Rock and State of Colorado standards and statutes, respectively; and that I am the Engineer responsible for all design and revisions relative to said plans.

TOWN OF CASTLE ROCK APPROVAL PLANS ARE HEREBY APPROVED FOR ONE YEAR FROM DATE OF DEVELOPMENT SERVICES APPROVAL

APPROVED BY:

DEVELOPMENT SERVICES DATE

SHEET TITLE:
ANTENNA & PLUMBING DETAILS

SHEET 4 OF 11
C-3
REVISION: D
TEP #: 236764.403579

TEP is a family of companies licensed to provide different services in different jurisdictions. Depending on the jurisdiction, professional engineering and land surveying services are provided by TEP OpCo LLC, a Delaware limited liability company, TEP Engineering, PLLC, a North Carolina professional limited liability company, or M&H Engineering, PLLC, a New York professional limited liability company. General contractor services are provided by TEP OpCo LLC, a Delaware limited liability company. We acquire the requisite licenses in each state. Additional information can be obtained from the company.

EQUIPMENT

ITEM NUMBER	PRODUCT	QTY.	INTERNAL MFG. #	PROVIDED BY
1	RADIO, ERICSSON 4490	1 MAX	40954	OTHERS
	RADIO, ERICSSON 4890		40955	OTHERS
2	DIPLEXER, JMA, D8CC-AW-P-4BF	1	40064	OTHERS
3	THERMOSTAT, PECO TF115-001	1	40008	COMPTEK
4	FAN - AXIAL, OA109EC-UR-1TBIP68A, 106CFM, 43DB, 4.9W, .08A, IP68-ATEX SERIES	6	40131	COMPTEK
5	ASSY, BUS BAR, SHORT MOUNT, SHORT BAR	1	51314	COMPTEK

PRODUCT TABLE

PRODUCT TYPE	PRODUCT	ID NUMBER	INTERNAL MFG. #
BACKPACK	BACKPACK, XL CROPPED, ERICSSON 4890 SINGLE RADIO, DIPLEXER	TBD	TBD

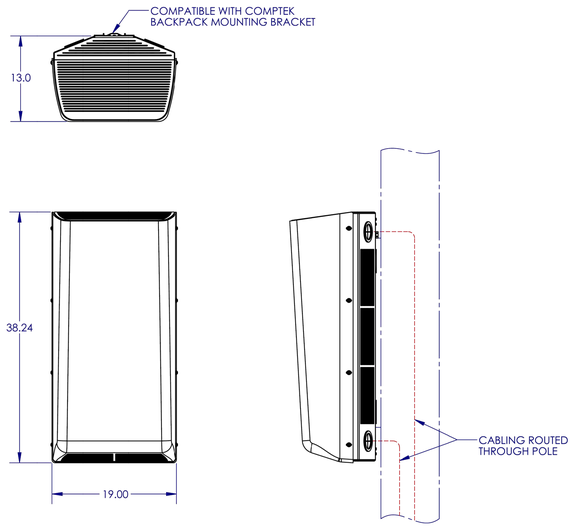

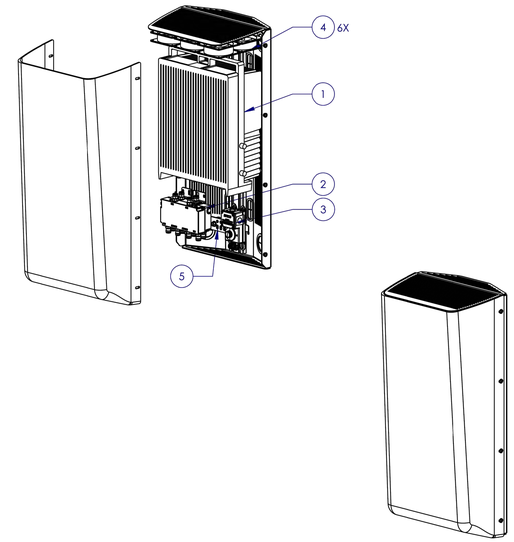

REVISIONS

REV.	DESCRIPTION	DATE	DRAWN	APPR.	RELEASE #
01	INITIAL RELEASE	12/13/2023	JAD	DAC	P000677

EQUIPMENT

ITEM NUMBER	PRODUCT	QTY.	COMPTEK P/N	PROVIDED BY
1	ANTENNA, JMA, CX14OMI236-1C	1	40074	OTHERS

PRODUCT TABLE

PRODUCT TYPE	ID NUMBER	PRODUCT	COLOR	SCD #	INTERNAL MFG. #
ANTENNA SECTION	00118052400000540	KIT, CANTENNA TOPPER, JMA CX14OMI236, FIBERGLASS DOME	SINGLE COLOR	30996	70950

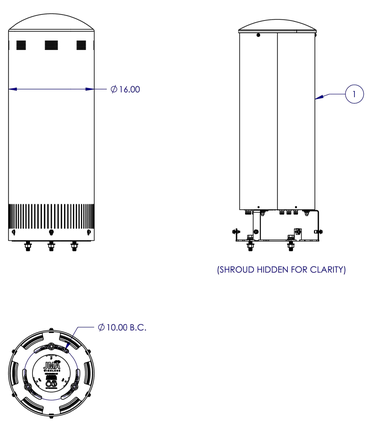

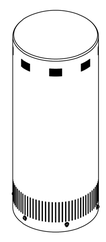

REVISIONS

REV.	DESCRIPTION	DATE	DRAWN	APPR.	RELEASE #
01	INITIAL RELEASE	9/13/2022	AJB	DAC	P000380
02	UPDATE TO PRODUCTION PARTS	11/16/2022	JAD	DAC	P000484
03	UPDATE VENTING	2/15/2023	JAD	DAC	P000506

EQUIPMENT

ITEM NUMBER	PRODUCT	QTY.	INTERNAL MFG. #	PROVIDED BY
1	ERICSSON, C-BAND, AIR 1672, 16T16R B77D (DUAL BAND - C8R5 + C-BAND)	3	40986	OTHERS
2	FAN - AXIAL, OA109EC-UR-1TBIP68A, 106CFM, 43DB, 4.9W, .08A, IP68-ATEX SERIES	6	40131	COMPTEK
3	THERMOSTAT, PECO TF115-001	1	40008	COMPTEK

PRODUCT TABLE

PRODUCT TYPE	PRODUCT	ID NUMBER	INTERNAL MFG. #
ANTENNA SECTION	KIT, 5G TOPPER, ERICSSON 1672, SHEET METAL	00118052400000946	71370

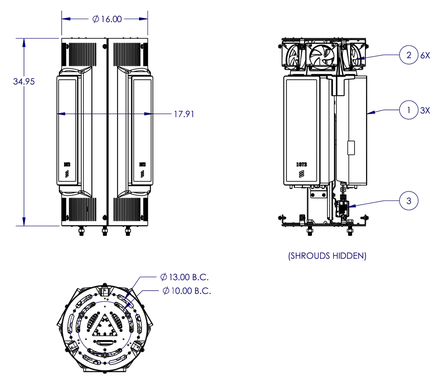

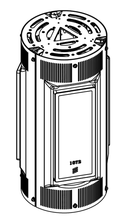

NOTES:
- FULL SHROUD PAINTABLE TO MATCH POLE. COLOR TO BE SPECIFIED AT THE TIME OF P.O.
- MAXIMUM DESIGN WIND SPEED FOR 700 YEARS MRI = 150MPH
- ANALYSIS BASED OFF CYLINDRICAL TOP SHROUD 16" DIAMETER BY 43" HEIGHT (ALL OTHER CHANGES IN FORM FACTOR MUST BE APPROVED BY COMPTEK)

REVISIONS

REV.	DESCRIPTION	DATE	DRAWN	APPR.	RELEASE #
01	INITIAL RELEASE	5/7/2025	JAD	DAC	P000769

BACKPACK SHROUD

SCALE: N.T.S.

PLANS PREPARED FOR:

© Unauthorized use of AT&T, Verizon, T-Mobile, Dish Network logos is prohibited. Copyright 2024 TEP

10000 PARK MEADOWS DR, SUITE 300
LONE TREE, CO 80124
(303) 489-7836

PLANS PREPARED BY:

I:\LLogos\TEP main logo -rotator.png

TEP DPCG LLC
4570 IVY ST SUITE B-100
DENVER, CO 80216
OFFICE: (303) 566-9914

PROJECT INFORMATION:

ALCAZAR SC

XXXX TRAILBLAZER WAY,
CASTLE ROCK, CO 80109
(DOUGLAS COUNTY)

REV	DATE	REV	DATE	REV	DATE	REV	DATE
D	07-24-25						
C	05-02-25						
B	11-03-23						
A	08-20-23						
7	07-27-22						
6	02-23-22						

DRAWN BY: DRB | CHECKED BY: RPM | ISSUED FOR: 100% PERMITTING CD's | PRELIMINARY

These plans have been reviewed by the Town of Castle Rock for concept only. The review does not imply responsibility by the reviewing department, the Town Engineer, or the Town of Castle Rock for accuracy and correctness of the calculations. Furthermore, the review does not imply that quantities of items on the plans are the final quantities required. The review shall not be construed for any reason as acceptance of financial responsibility by the Town for additional quantities of items shown that may be required during the construction phase. All work shall be constructed in accordance with the Town of Castle Rock Municipal Code, Technical Manuals and/or other Town-approved applicable standards.

INDEMNIFICATION AND ADHERENCE TO STANDARDS STATEMENTS

SEAL:

PRELIMINARY
DO NOT USE FOR CONSTRUCTION

I hereby affirm that these final construction plans were prepared under my direct supervision, in accordance with all applicable Town of Castle Rock and State of Colorado laws, regulations, and ordinances, respectively, and that I am fully responsible for all design and revisions relative to said plans.

TOWN OF CASTLE ROCK APPROVAL PLANS ARE HEREBY APPROVED FOR ONE YEAR FROM DATE OF DEVELOPMENT SERVICES APPROVAL

APPROVED BY:

DEVELOPMENT SERVICES DATE

SHEET TITLE:

BACKPACK SHROUD

SHEET 5 OF 11 | REVISION: D

C-4

TEP #: 236764.403579

TEP is a family of companies licensed to provide different services in different jurisdictions. Depending on the jurisdiction, professional engineering and land surveying services are provided by TEP DPCG LLC, a Delaware limited liability company, TEP Engineering, PLLC, a North Carolina professional limited liability company, or M&H Engineering, PLLC, a New York professional limited liability company. General contractor services are provided by TEP DPCG LLC, a Delaware limited liability company. We acquire the requisite licenses in each state. Additional information can be obtained from the company.

POLE CONFIGURATION TABLE (FOR REFERENCE)

POLE HEIGHT (P)	OVERALL HEIGHT (H)	LIGHT ARM MOUNTING HEIGHT (M)	BACKPACK MOUNTING HEIGHT (B)
30' 0"	33' 4"	28' 6"	25' 8"
35' 0"	38' 4"	33' 6"	30' 8"

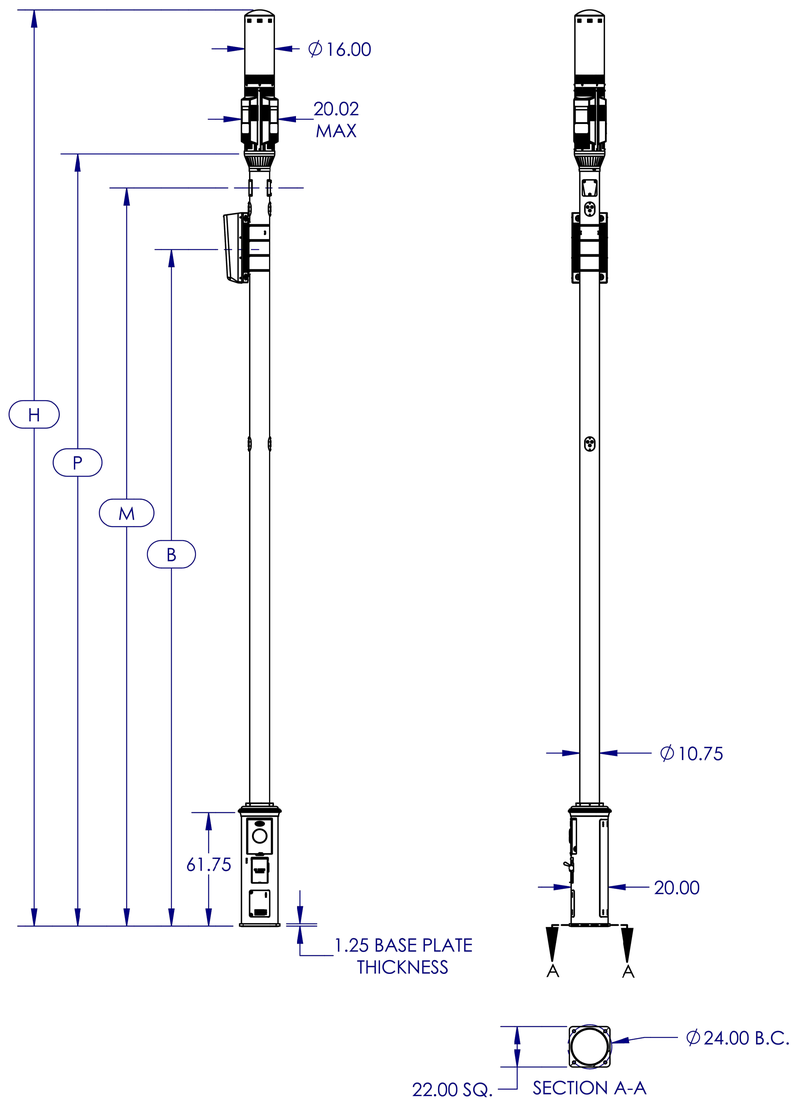

PRODUCT TABLE

ITEM NUMBER	PRODUCT TYPE	PRODUCT	ID NUMBER	SUB SCD#	INTERNAL MFG. #
1	ANTENNA SECTION	KIT, CANTENNA TOPPER, JMA CX14OMI236, FIBERGLASS DOME	SEE SUB-COMPONENTS	30996	70950
2	ANTENNA SECTION (CLIENT TO SPECIFY ONE)	KIT, 5G TOPPER, ERICSSON 1672, SHEET METAL	SEE SUB-COMPONENTS	31454	71370
		KIT, 5G TOPPER, ERICSSON 6705, SHEET METAL	SEE SUB-COMPONENTS	30889	VARIES
3	TRANSITION KIT (CLIENT TO SPECIFY ONE)	TRANSITION SHROUD, VENTED, ROUND POLE TO 16IN ROUND TOPPER, WITH ADAPTER KIT	001180524000000564	-	71162
		TRANSITION SHROUD, FLUTED POLE TO 16IN ROUND TOPPER	001180524000000653	-	(71064)
4	BASE CABINET KIT	XCEL BASE CABINET EQUIPMENT KIT, ERICSSON 8863, 6308	SEE SUB-COMPONENTS	31342	71269
5	BACKPACK (OPTIONAL, CLIENT TO SPECIFY ONE OR NONE)	BACKPACK, XL CROPPED, ERICSSON 4890 SINGLE RADIO, DIPLEXER	SEE SUB-COMPONENTS	31341	71264
		ASSEMBLY - KIT, CROPPED XL, MID POWER BACKPACK, ERICSSON 8863 B77D/C-BAND RADIO / 6304 PSU	SEE SUB-COMPONENTS	31356	71278
6	MOUNTING BRACKET (REQUIRED FOR BACKPACK)	BACKPACK MOUNTING BRACKET, 3.5IN-18IN POLES	SEE SUB-COMPONENTS	30667	52301

SUPPORT POLE & BASE CABINET STRUCTURE SHOWN FOR REFERENCE. THIS SCD ONLY COVERS THE EQUIPMENT KITS. EQUIPMENT KITS MAY BE USED WITH XCEL STANDARD ROUND OR XCEL EVANS FLUTED POLES.

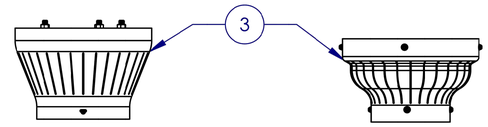

TRANSITION KIT FOR XCEL STD ROUND POLE
001180524000000564
SCALE 1 : 16

TRANSITION KIT FOR XCEL EVANS FLUTED POLE
001180524000000653
SCALE 1 : 16

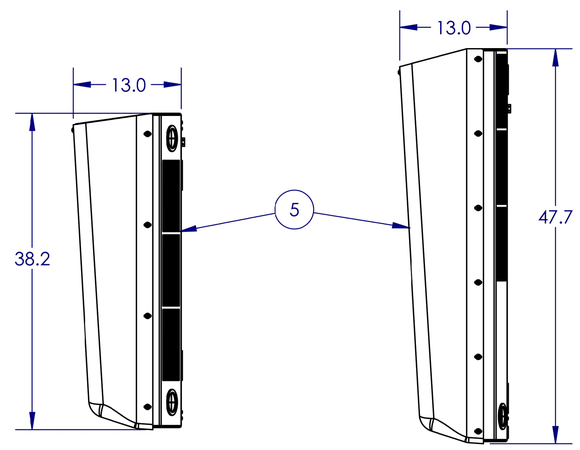

ERICSSON 4890 BACKPACK (31341)
SCALE 1 : 16

ERICSSON 8863 + PSU BACKPACK (31356)
SCALE 1 : 16

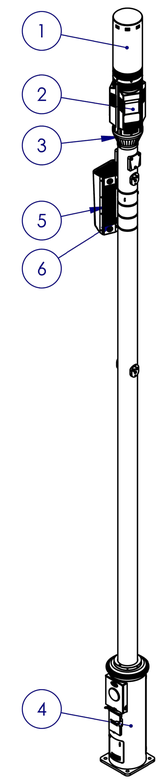

REVISIONS					
REV.	DESCRIPTION	DATE	DRAWN	APPR.	RELEASE #
01	INITIAL RELEASE	6/12/2025	JAD	DAC	P000782

POLE DESIGN
SCALE: N.T.S.

PLANS PREPARED FOR:
10000 PARK MEADOWS DR, SUITE 300
LONE TREE, CO 80124
(303) 489-7836

PLANS PREPARED BY:
TEP OPCO LLC
4570 IVY ST SUITE B-100
DENVER, CO 80216
OFFICE: (303) 565-9914

PROJECT INFORMATION:
ALCAZAR SC
XXXX TRAILBLAZER WAY,
CASTLE ROCK, CO 80109
(DOUGLAS COUNTY)

REV	DATE	DRAWN BY: DRB	CHECKED BY: RPM
D	07-24-25	PRELIMINARY	
C	05-02-25	PRELIMINARY	
B	11-03-23	PRELIMINARY	
A	09-20-23	PRELIMINARY	
7	07-27-22	100% PERMITTING CD's	
6	02-23-22	100% PERMITTING CD's	
		ISSUED FOR:	

These plans have been reviewed by the Town of Castle Rock for concept only. The review does not imply responsibility by the reviewing department, the Town Engineer, or the Town of Castle Rock for accuracy and correctness of the calculations. Furthermore, the review does not imply that quantities of items on the plans are the final quantities required. The review shall not be construed for any reason as acceptance of financial responsibility by the Town for additional quantities of items shown that may be required during the construction phase.
All work shall be constructed in accordance with the Town of Castle Rock Municipal Code, Technical Manuals and/or other Town-approved applicable standards.

INDEMNIFICATION AND ADHERENCE TO STANDARDS STATEMENTS

SEAL:
PRELIMINARY DO NOT USE FOR CONSTRUCTION

I hereby affirm that these final construction plans were prepared under my direct supervision, in accordance with all applicable Town of Castle Rock and State of Colorado laws, regulations, ordinances, standards and specs. I am fully responsible for all design and revisions relative to said plans.

TOWN OF CASTLE ROCK APPROVAL PLANS ARE HEREBY APPROVED FOR ONE YEAR FROM DATE OF DEVELOPMENT SERVICES APPROVAL

APPROVED BY:

DEVELOPMENT SERVICES DATE

SHEET TITLE:
POLE DESIGN

SHEET 6 OF 11
C-5
REVISION: D
TEP #: 236764.403579

TEP is a family of companies intended to provide different services in different jurisdictions. Depending on the jurisdiction, professional engineering and land surveying services are provided by TEP Engineering, PLLC, a New York professional limited liability company, TEP Engineering, PLLC, a North Carolina professional limited liability company, or ABAR Engineering, PLLC, a Delaware limited liability company. We acquire the requisite licenses in each state. Additional information can be obtained from the company.

ITEM NO.	QTY	DESCRIPTION	WEIGHT (lbs)	WEIGHT TOTAL (lbs)
1	1	CAISSON, CAST-IN-PLACE CONCRETE	9235.80	9235.8
2	20	#3, GRADE 60 STEEL, HOOP REINFORCEMENT	2.90	58
3	12	#6, GRADE 60 STEEL, VERTICAL REINFORCEMENT	12.32	147.84
4	2-8 (4 SHOWN)	CONDUIT, 1.25IN-2.5IN PVC (2IN SHOWN)	1.58	6.32
5	1	ANCHOR CAGE ASSEMBLY, 24IN B.C. X 66IN LG	109.01	109.01

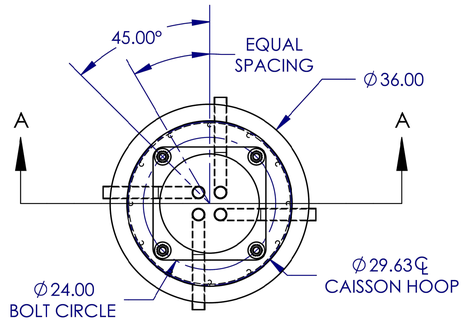

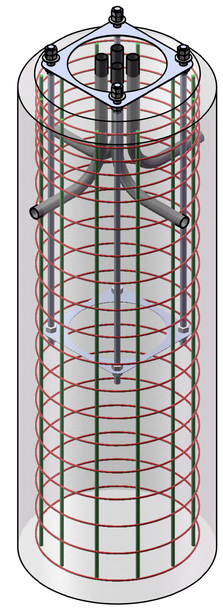

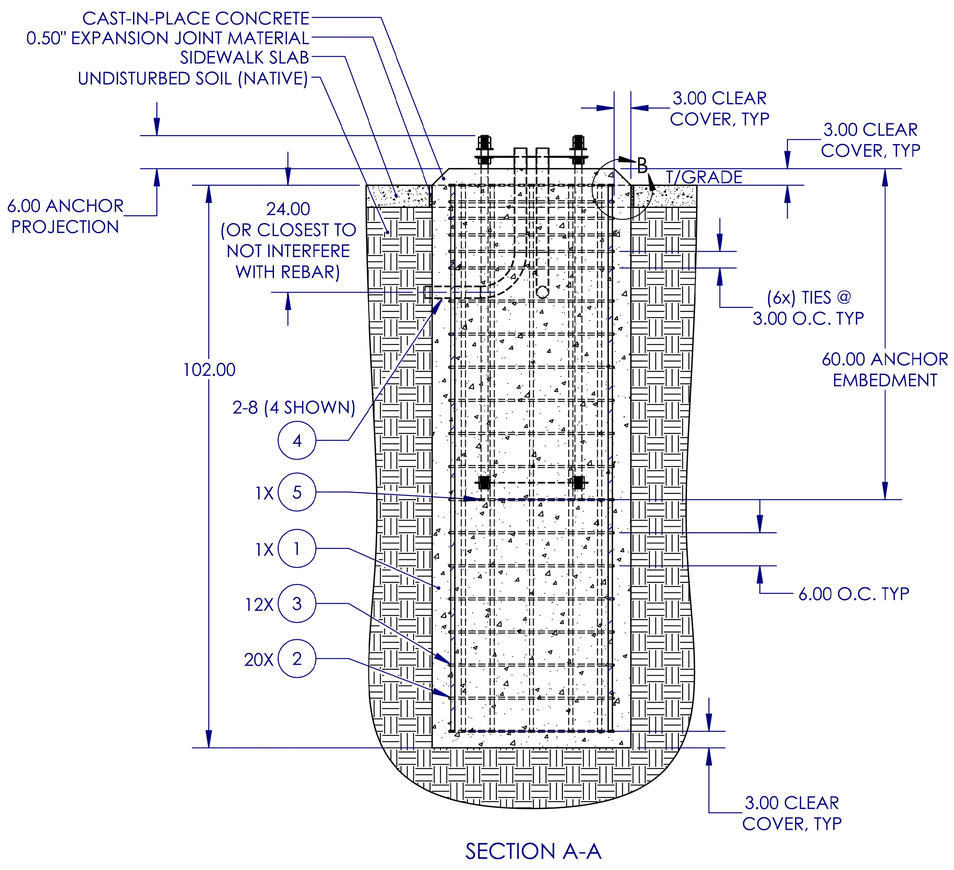

SECTION A-A

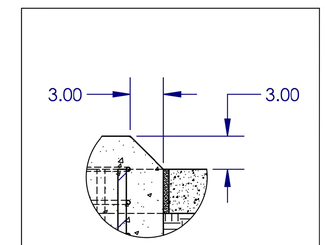

DETAIL B - CONCRETE CHAMFER

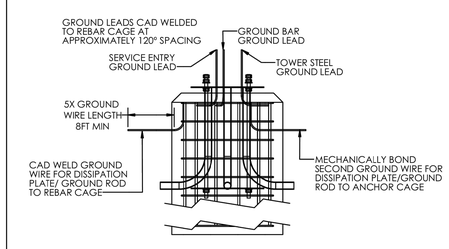

TYP GROUNDING DETAIL

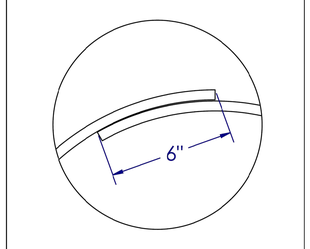

6" MINIMUM OVERLAP FOR TIES

FOUNDATION DESIGN

SCALE: N.T.S.

PLANS PREPARED FOR:

© Unauthorized use prohibited. Signature, Watermark, Logo/Graphic/Icon/Trademark Logo, Stamping

10000 PARK MEADOWS DR. SUITE 300
LONE TREE, CO 80124
(303) 489-7836

PLANS PREPARED BY:

E:\Logos\TEP main logo -color.png

TEP OPCO LLC
4570 IVY ST SUITE B-100
DENVER, CO 80216
OFFICE: (303) 566-9914

PROJECT INFORMATION:

ALCAZAR SC

XXXX TRAILBLAZER WAY,
CASTLE ROCK, CO 80109
(DOUGLAS COUNTY)

REV	DATE	ISSUED FOR:
D	07-24-25	PRELIMINARY
C	05-02-25	PRELIMINARY
B	11-03-23	PRELIMINARY
A	09-20-23	PRELIMINARY
7	07-27-22	100% PERMITTING CD's
6	02-23-22	100% PERMITTING CD's

DRAWN BY: DRB CHECKED BY: RPM

These plans have been reviewed by the Town of Castle Rock for concept only. The review does not imply responsibility by the reviewing department, the Town Engineer, or the Town of Castle Rock for accuracy and correctness of the calculations. Furthermore, the review does not imply that quantities of items on the plans are the final quantities required. The review shall not be construed for any reason as acceptance of financial responsibility by the Town for additional quantities of items shown that may be required during the construction phase. All work shall be constructed in accordance with the Town of Castle Rock Municipal Code, Technical Manuals and/or other Town-approved applicable standards.

INDEMNIFICATION AND ADHERENCE TO STANDARDS STATEMENTS

SEAL:

PRELIMINARY
DO NOT USE FOR CONSTRUCTION

I hereby affirm that these final construction plans were prepared under my direct supervision, in accordance with all applicable Town of Castle Rock and State of Colorado laws, regulations, ordinances, respectively, and that I am fully responsible for all design and revisions relative to said plans.

TOWN OF CASTLE ROCK APPROVAL PLANS ARE HEREBY APPROVED FOR ONE YEAR FROM DATE OF DEVELOPMENT SERVICES APPROVAL

APPROVED BY:

DEVELOPMENT SERVICES DATE

SHEET TITLE:

FOUNDATION DESIGN

SHEET 7 OF 11 | REVISION: D

C-6

TEP #: 236764.403579

TEP is a family of companies is pleased to provide different services in different jurisdictions. Depending on the jurisdiction, professional engineering and land surveying services are provided by TEP OpCo LLC, a Delaware limited liability company. We acquire the requisite licenses in each state. Additional information can be obtained from the company.

RADIO FREQUENCY NOTES

1. PROPOSED VOLTAGE – THE POWER SUPPLIED TO THE SITE IS 120/240V AC. THIS VOLTAGE IS CONVERATION TO –48V DC WHICH IS THEN SUPPLIED TO THE ANTENNAS.
2. MAXIMUM TRANSMISSION WATTAGE – THIS SITE WILL BE INSTALLED WITH 6 RADIOS. (1) DUAL BAND RADIO FOR PCS AND AWS WITH A MAXIMUM OF 320 TOTAL WATTS, (1) LAA RADIO WITH A MAXIMUM OF 1 TOTAL WATT, (1) CBRS RADIO WITH A MAXIMUM OF 20 TOTAL WATTS, AND (3) 28GHz/39GHz RADIOS WITH A MAXIMUM OF 1 TOTAL WATT EACH.
3. RADIO FREQUENCY – THIS SITE WILL OPERATE ON 4 BANDS: PCS (1965 MHz to 1975 MHz), AWS (2120 MHz TO 2130 MHZ AND 2170 MHz TO 2180 MHz), LAA (5150 MHz TO 5250 MHz AND 5745–5825 MHz) AND 28GHz/39GHz (27500 MHz TO 28300 mhZ AND 38600 MHz TO 39400 MHz)
4. MICROWAVE EXPULSION – NO MICROWAVE RADIOS WILL BE USED AT THIS SITE.
5. MAXIMUM ALLOWABLE TRANSMISSION – THE FFC THRESHOLDS IN EIRP ARE AS FOLLOWS:
   - 5.1. PCS 1640 W/MHz
   - 5.2. AWS 1640 W/MHz
   - 5.3. LAA 0.05 W/MHz
   - 5.4. CBRS 40 dBm (10W) PER 10 MHz
   - 5.5. 28GHz/39GHz 75 dBm (31623W) PER 100 MHz)

UPPER RF WARNING

PROPOSED RF SIGNAGE BY VZW TO BE NO MORE THAN 3' BELOW NEAREST ANTENNA. SIGNAGE TO BE STREET FACING.

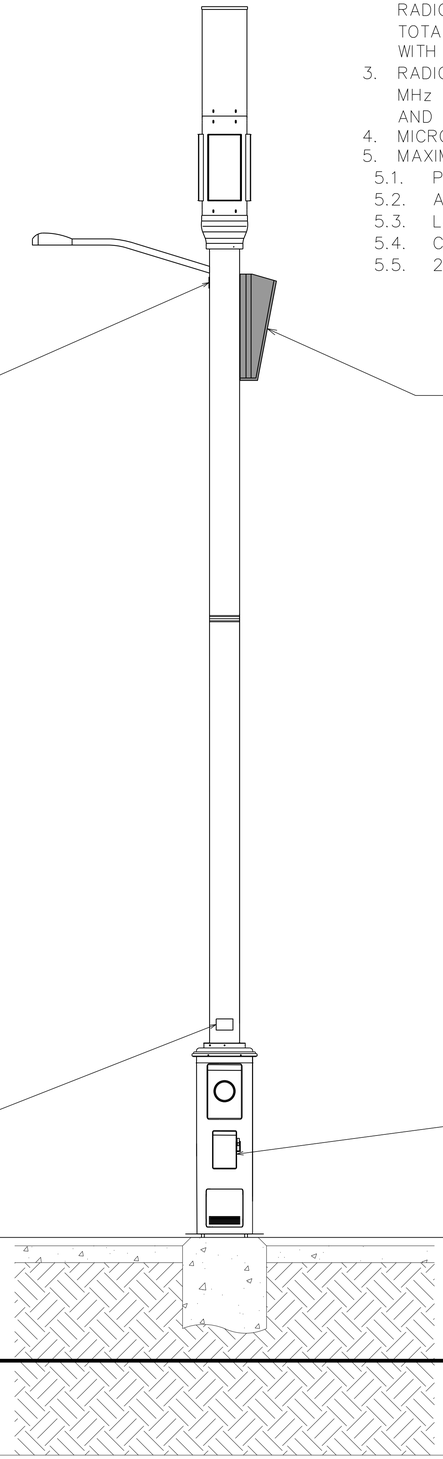

PROPOSED BACKBACK FOR 4890 RADIO AND PSU 6308 – THIS IS TO BE INSTALLED ON THE BACK OF THE POLE AND IS SHOWN HERE FOR ILLUSTRATION PURPOSES

XCEL ENERGY RF/ POWER SHUT-OFF SWITCH

THIS SWITCH SHUTS OFF ALL POWER TO TRANSMITTERS AND ANTENNAS

XCEL POWER DISCONNECT

PROPOSED DISCONNECT SIGNAGE BY VZW INSTALLED ON INTEGRATED POWER DISCONNECT BELOW D/C LEVER.

VERIZON IDENTIFICATION

VERIZON TO INSTALL A PERMANENT PLAQUE AT 3' TO 6' IN HEIGHT DISPLAYING: POLE OWNERSHIP, UNIQUE POLE IDENTIFICATION NUMBER MATCHING POLE CODE FROM MASTER TRACKER, AND A CONTACT PHONE NUMBER FOR POLE OWNER.

PROPOSED POLE SIGNAGE

SCALE: N.T.S.

PLANS PREPARED FOR:

© Unless around/R. Signature Requested/Logo/Licensed/Trademark/Logo Stacking

10000 PARK MEADOWS DR. SUITE 300
LONE TREE, CO 80124
(303) 489-7836

PLANS PREPARED BY:

I:\Logos\TEP non logo - color.jpg

TEP OPCO LLC
4570 IVY ST SUITE B-100
DENVER, CO 80216
OFFICE: (303) 566-3914

PROJECT INFORMATION:

ALCAZAR SC

XXXX TRAILBLAZER WAY.
CASTLE ROCK, CO 80109
(DOUGLAS COUNTY)

REV	DATE	
D	07-24-25	PRELIMINARY
C	05-02-25	PRELIMINARY
B	11-03-23	PRELIMINARY
A	09-20-23	PRELIMINARY
7	07-27-22	100% PERMITTING CDs
6	02-23-22	100% PERMITTING CDs
		ISSUED FOR:

DRAWN BY: DRB
CHECKED BY: RPM

These plans have been reviewed by the Town of Castle Rock for concept only. The review does not imply responsibility by the reviewing department, the Town Engineer, or the Town of Castle Rock for accuracy and correctness of the calculations. Furthermore, the review does not imply that quantities of items on the plans are the final quantities required. The review shall not be construed for any reason as acceptance of financial responsibility by the Town for additional quantities of items shown that may be required during the construction phase. All work shall be constructed in accordance with the Town of Castle Rock Municipal Code, Technical Manuals and/or other Town-approved applicable standards.

INDEMNIFICATION AND ADHERENCE TO STANDARDS STATEMENTS

SEAL:

PRELIMINARY
DO NOT USE FOR CONSTRUCTION

I hereby affirm that these final construction plans were prepared by me or under my direct supervision in accordance with all applicable Town of Castle Rock and State of Colorado standards and statutes, respectively; and that I am fully responsible for all design and revisions relative to said plans.

TOWN OF CASTLE ROCK APPROVAL PLANS ARE VALID AND APPROVED FOR ONE YEAR FROM DATE OF DEVELOPMENT SERVICES APPROVAL

APPROVED BY:

DEVELOPMENT SERVICES DATE

SHEET TITLE:

POLE SIGNAGE DETAILS

SHEET 8 OF 11

C-7

REVISION: D

TEP #: 236764.403579

TEP is a family of companies licensed to provide different services in different jurisdictions. Depending on the jurisdiction, professional engineering and land surveying services are provided by TEP OpCo LLC, a Delaware limited liability company, TEP Engineering, PLLC, a North Carolina professional limited liability company, or M&H Engineering, PLLC, a New York professional limited liability company. General contractor services are provided by TEP OpCo LLC, a Delaware limited liability company. We require the requisite licenses in each state. Additional information can be obtained from the company.

ELECTRICAL NOTES:

SCOPE:

1. PROVIDE LABOR, MATERIALS, INSPECTION, AND TESTING TO PROVIDE CODE COMPLIANCE FOR ELECTRIC, TELEPHONE, AND GROUNDING/LIGHTNING SYSTEMS.

CODES:

1. THE INSTALLATION SHALL COMPLY WITH APPLICABLE LAWS AND CODES. THESE INCLUDE BUT ARE NOT LIMITED TO THE LATEST ADOPTED EDITIONS OF:
   A. THE NATIONAL ELECTRICAL SAFETY CODE
   B. THE NATIONAL ELECTRIC CODE – NFPA–70
   C. REGULATIONS OF THE SERVING UTILITY COMPANY
   D. LOCAL AND STATE AMENDMENTS
   E. THE INTERNATIONAL ELECTRIC CODE – IEC (WHERE APPLICABLE)
2. PERMITS REQUIRED SHALL BE OBTAINED BY THE CONTRACTOR.
3. AFTER COMPLETION AND FINAL INSPECTION OF THE WORK, THE OWNER SHALL BE FURNISHED A CERTIFICATE OF COMPLETION AND APPROVAL.

TESTING:

1. UPON COMPLETION OF THE INSTALLATION, OPERATE AND ADJUST THE EQUIPMENT AND SYSTEMS TO MEET SPECIFIED PERFORMANCE REQUIREMENTS. THE TESTING SHALL BE DONE BY QUALIFIED PERSONNEL.

GUARANTEE:

1. IN ADDITION TO THE GUARANTEE OF THE EQUIPMENT BY THE MANUFACTURER, EACH PIECE OF EQUIPMENT SPECIFIED HEREIN SHALL ALSO BE GUARANTEED FOR DEFECTS OF MATERIAL OR WORKMANSHIP OCCURRING DURING A PERIOD OF ONE (1) YEAR FROM FINAL ACCEPTANCE OF THE WORK BY THE OWNER AND WITHOUT EXPENSE TO THE OWNER.
2. THE WARRANTEE CERTIFICATES & GUARANTEES FURNISHED BY THE MANUFACTURERS SHALL BE TURNED OVER TO THE OWNER.

UTILITY CO-ORDINATION:

1. CONTRACTOR SHALL COORDINATE WORK WITH THE POWER AND TELEPHONE COMPANIES AND SHALL COMPLY WITH THE SERVICE REQUIREMENTS OF EACH UTILITY COMPANY.

EXAMINATION OF SITE:

1. PRIOR TO BEGINNING WORK, THE CONTRACTOR SHALL VISIT THE SITE OF THE JOB AND SHALL FAMILIARIZE HIMSELF WITH THE CONDITIONS AFFECTING THE PROPOSED ELECTRICAL INSTALLATION AND SHALL MAKE PROVISIONS AS TO THE COST THEREOF. FAILURE TO COMPLY WITH THE INTENT OF THIS SECTION WILL IN NO WAY RELIEVE THE CONTRACTOR OF PERFORMING THE WORK NECESSARY FOR A COMPLETE AND WORKING SYSTEM OR SYSTEMS.

CUTTING, PATCHING AND EXCAVATION:

1. COORDINATION OF SLEEVES, CHASES, ETC., BETWEEN SUBCONTRACTORS WILL BE REQUIRED PRIOR TO THE CONSTRUCTION OF ANY PORTION OF THE WORK. CUTTING AND PATCHING OF WALLS, PARTITIONS, FLOORS, AND CHASES IN CONCRETE, WOOD, STEEL OR MASONRY SHALL BE DONE AS PROVIDED ON THE DRAWINGS.
2. NECESSARY EXCAVATIONS AND BACKFILLING INCIDENTAL TO THE ELECTRICAL WORK SHALL BE PROVIDED BY THE ELECTRICAL CONTRACTOR UNLESS SPECIFICALLY NOTED OTHERWISE ON THE DRAWING.
3. SEAL PENETRATIONS THROUGH RATED WALLS, FLOORS, ETC., WITH APPROVED METHOD AS LISTED BY UL.

RACEWAYS / CONDUITS GENERAL:

1. CONDUCTORS SHALL BE INSTALLED IN LISTED RACEWAYS. CONDUIT SHALL BE RIGID STEEL, EMT, SCH40 PVC, OR SCH80PVC AS INDICATED ON THE DRAWINGS. THE RACEWAY SYSTEM SHALL BE COMPLETE COMPLETE BEFORE INSTALLING CONDUCTORS.
2. EXTERIOR RACEWAYS AND GROUNDING SLEEVES SHALL BE SEALED AT POINTS OF ENTRANCE AND EXIT. THE RACEWAY SYSTEM SHALL BE BONDED PER NEC.

EXTERIOR CONDUIT:

1. EXPOSED CONDUIT SHALL BE NEATLY INSTALLED AND RUN PARALLEL OR PERPENDICULAR TO STRUCTURAL ELEMENTS. SUPPORTS AND MOUNTING HARDWARE SHALL BE HOT DIPPED GALVANIZED STEEL.
2. THE CONDUIT SHALL BE RIGID STEEL AT GRADE TRANSITIONS OR WHERE EXPOSED TO DAMAGE.
3. UNDERGROUND CONDUITS SHALL BE RIGID STEEL, SCH40 PVC, OR SCH80 PVC AS INDICATED ON THE DRAWINGS.
4. BURIAL DEPTH OF CONDUITS SHALL BE AS REQUIRED BY CODE FOR EACH SPECIFIC CONDUIT TYPE AND APPLICATION, BUT SHALL NOT BE LESS THAN THE FROST DEPTH AT THE SITE.
5. CONDUIT ROUTES ARE SCHEMATIC. CONTRACTOR SHALL FIELD VERIFY ROUTES BEFORE BID. COORDINATE ROUTE WITH WIRELESS CARRIER AND/OR BUILDING OWNER.

INTERIOR CONDUIT:

1. CONCEALED CONDUIT IN WALLS OR INTERIOR SPACES ABOVE GRADE MAY BE EMT OR PVC.
2. CONDUIT RUNS SHALL USE APPROVED COUPLINGS AND CONNECTORS. PROVIDE INSULATED BUSHING FOR ALL CONDUIT TERMINATIONS. CONDUIT RUNS IN A WET LOCATION SHALL HAVE WATERPROOF FITTINGS.
3. PROVIDE SUPPORTS FOR CONDUITS IN ACCORDANCE WITH NEC REQUIREMENTS. CONDUITS SHALL BE SIZED AS REQUIRED BY NEC.

EQUIPMENT:

1. DISCONNECT SWITCHES SHALL BE SERVICE ENTRANCE RATED, HEAVY DUTY TYPE.
2. CONTRACTOR SHALL VERIFY MAXIMUM AVAILABLE FAULT CURRENT AND COORDINATE INSTALLATION WITH THE LOCAL UTILITY BEFORE STARTING WORK. CONTRACTOR WILL VERIFY THAT EXISTING CIRCUIT BREAKERS ARE RATED FOR MORE THAN AVAILABLE FAULT CURRENT AND REPLACE AS NECESSARY.
3. NEW CIRCUIT BREAKERS SHALL BE RATED TO WITHSTAND THE MAXIMUM AVAILABLE FAULT CURRENT AS DETERMINED BY THE LOCAL UTILITY.

CONDUCTORS:

1. FURNISH AND INSTALL CONDUCTORS SPECIFIED IN THE DRAWINGS. CONDUCTORS SHALL BE COPPER AND SHALL HAVE TYPE THWN (MIN) (75° C) INSULATION, RATED FOR 600 VOLTS.
2. THE USE OF ALUMINUM CONDUCTORS SHALL BE LIMITED TO THE SERVICE FEEDERS INSTALLED BY THE UTILITY.
3. CONDUCTORS SHALL BE PROVIDED AND INSTALLED AS FOLLOWS:
   A. MINIMUM WIRE SIZE SHALL BE #12 AWG.
   B. CONDUCTORS SIZE #8 AND LARGER SHALL BE STRANDED. CONDUCTORS SIZED #10 AND #12 MAY BE SOLID OR STRANDED.
   C. CONNECTION FOR #10 AWG #12 AWG SHALL BE BY TWISTING TIGHT AND INSTALLING INSULATED PRESSURE OR WIRE NUT CONNECTIONS.
   D. CONNECTION FOR #8 AWG AND LARGER SHALL BE BY USE OF STEEL CRIMP–ON SLEEVES WITH NYLON INSULATOR.
3. CONDUCTORS SHALL BE COLOR CODED IN ACCORDANCE WITH NEC STANDARDS.

UL COMPLIANCE:

1. ELECTRICAL MATERIALS, DEVICES, CONDUCTORS, APPLIANCES, AND EQUIPMENT SHALL BE LABELED/LISTED BY UL OR ACCEPTED BY JURISDICTION (I.E., LOCAL COUNTY OR STATE) APPROVED THIRD PARTY TESTING AGENCY.

GROUNDING:

1. ELECTRICAL NEUTRALS, RACEWAYS AND NON–CURRENT CARRYING PARTS OF ELECTRICAL EQUIPMENT AND ASSOCIATED ENCLOSURES SHALL BE GROUNDED IN ACCORDANCE WITH NEC ARTICLE 250. THIS SHALL INCLUDE NEUTRAL CONDUCTORS, CONDUITS, SUPPORTS, CABINETS, BOXES, GROUND BUSSES, ETC. THE NEUTRAL CONDUCTOR FOR EACH SYSTEM SHALL BE GROUNDED AT A SINGLE POINT.
2. PROVIDE GROUND CONDUCTOR IN RACEWAYS PER NEC.
3. PROVIDE BONDING AND GROUND TO MEET NFPA 780 – "LIGHTNING PROTECTION" AS A MINIMUM.
4. PROVIDE GROUNDING SYSTEM AS INDICATED ON THE DRAWINGS, AS REQUIRED BY THE NATIONAL ELECTRIC CODE, RADIO EQUIPMENT MANUFACTURERS, AND MOTOROLA R56 (AS APPLICABLE).

ABBREVIATIONS AND LEGEND

A	AMPERE	PNLBD	PANELBOARD
AFG	ABOVE FINISHED GRADE	PVC	RIGID NON–METALLIC CONDUIT
ATS	AUTOMATIC TRANSFER SWITCH	RGS	RIGID GALVANIZED STEEL CONDUIT
AWG	AMERICAN WIRE GAUGE	SW	SWITCH
BCW	BARE COPPER WIRE	TGB	TOWER GROUND BAR
BFG	BELOW FINISHED GRADE	UL	UNDERWRITERS LABORATORIES
BKR	BREAKER	V	VOLTAGE
C	CONDUIT	W	WATTS
CKT	CIRCUIT	XFMR	TRANSFORMER
DISC	DISCONNECT	XMTR	TRANSMITTER
EGR	EXTERNAL GROUND RING		
EMT	ELECTRIC METALLIC TUBING		
FSC	FLEXIBLE STEEL CONDUIT		
GEN	GENERATOR		
GPS	GLOBAL POSITIONING SYSTEM		
GRD	GROUND		
IGB	ISOLATED GROUND BAR		
IGR	INTERIOR GROUND RING (HALO)		
KW	KILOWATTS		
NEC	NATIONAL ELECTRIC CODE		
PCS	PERSONAL COMMUNICATION SYSTEM		
PH	PHASE		
PNL	PANEL		

UNDERGROUND ELECTRICAL CONDUIT
UNDERGROUND TELEPHONE CONDUIT
KILOWATT–HOUR METER
UNDERGROUND BONDING AND GROUNDING CONDUCTOR.
GROUND ROD
CADWELD
GROUND ROD WITH INSPECTION WELL

ELECTRICAL NOTES

SCALE: N.T.S.

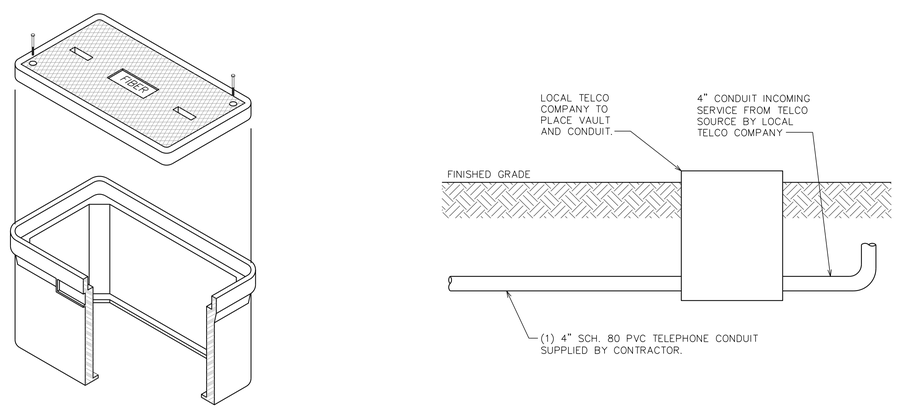

TYPICAL FIBER VAULT DETAILS

SCALE: N.T.S.

UTILITY PLAN SCHEDULE

ITEM	QTY/ DISTANCE	DESCRIPTION	PROVIDED BY	INSTALLED BY
TRANSFORMER	–	–	CORE	CORE
UTILITY POLES	–	–	CORE	CORE
OVERHEAD LINES	–	–	CORE	CORE
UTILITY POLE RISERS	–	–	CORE	CORE
CONDUCTORS, METER PEDESTAL TO EXISTING TRANSFORMER	–	–	CORE	CORE
CONDUITS, POWER PANEL TO METER PEDESTAL	25'±	2"ø PVC	VERIZON	VERIZON
CONDUCTORS, MONOPOLE TO METER PEDESTAL	25'±	(3)–#4 CU CONDUCTORS	VERIZON	VERIZON
METER CANISTER	–	SINGLE METER	VERIZON	VERIZON
METERING DEVICE	–	–	CORE	CORE
SERVICE DISCONNECT	–	PROPOSED 60A	VERIZON	VERIZON
METER PEDESTAL	1	PROPOSED	CORE	CORE

POWER NOTES:

PROVIDER: CORE
CONTACT: CUSTOMER SERVICE
PHONE: (303) 688–3100
POWER RUN: 25'±
SERVICE No:
W.O. No:

SERVICE NOTES:

1. VERIZON ELECTRICAL SERVICE SHALL BE 125A, 120/240V, 1ø, 3W.
2. PROVIDE LEVER TYPE SERVICE DISCONNECT

CONSTRUCTION NOTES:

1. CONTRACTOR TO RUN UNDERGROUND POWER LINES FROM PROPOSED ELECTRIC VAULT TO PROPOSED VERIZON SMALL CELL.
2. CONTRACTOR TO SUPPLY AND INSTALL ALL TRENCHES AND CONDUIT FROM PROPOSED ELECTRIC VAULT TO PROPOSED VERIZON SMALL CELL.
3. WIRING SHALL INCLUDE (3)–AWG #4 CU CONDUCTORS IN 2" PVC CONDUIT.
4. INSPECTION MUST BE COMPLETE, METER TAGGED AND SITE ADDRESSED BEFORE SERVICE IS ENERGIZED.
5. CONTRACTOR TO HAND DIG WITHIN 18" OF GAS LINE.

LEGEND

EXIST. PROPERTY LINE
ADJ. PROPERTY LINE
PROPERTY CORNER
EXIST. UTILITY POLE
TRAFFIC SIGNAL
TRANSFORMER
R/W RIGHT–OF–WAY
---OHW--- OVERHEAD WIRE
---UGW--- UNDERGROUND WIRE
---UGG--- UNDERGROUND GAS
---UGF--- UNDERGROUND FIBER
---UGT--- UNDERGROUND TELCO
--- WP --- WATER PIPE
EDGE OF PAVEMENT
STREET SIGN
LIGHT POLE
FIRE HYDRANT
MAN HOLE (FIBER, SANITARY, STORM, TELCO, WATER)
ELECTRICAL PULL BOX
IRRIGATION CONTROL VALVE
GAS VALVE
WATER METER
WATER VALVE

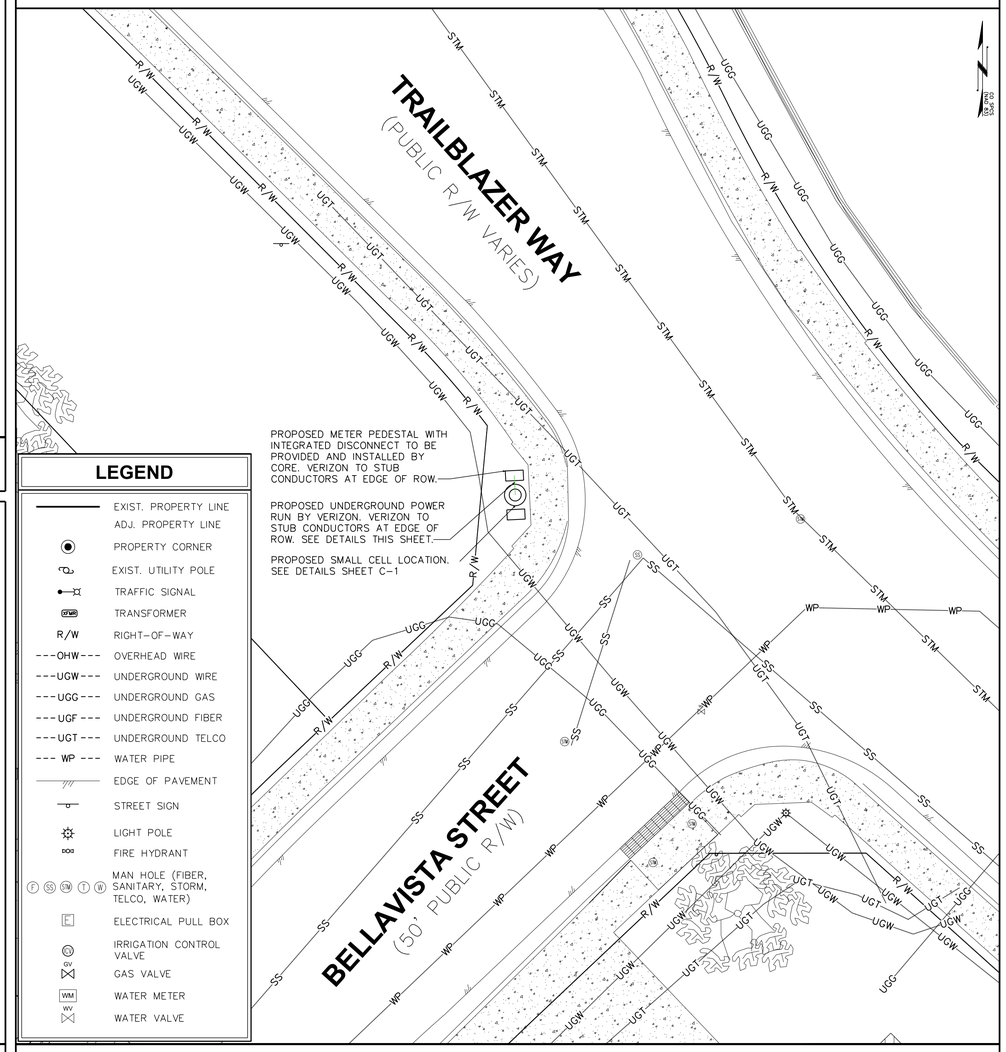

UTILITY PLAN

SCALE: 1" = 10'

PLANS PREPARED FOR:
D:\Clients\Verizon\TEP Sprint Requests\Ugo\Customer\Verizon\ugo_004.dwg
10000 PARK MEADOWS DR, SUITE 300
LONE TREE, CO 80124
(303) 489–7836

PLANS PREPARED BY:
J:\Ugo\TEP Mark Ugo –CDW.dwg
TEP OPCO LLC
4570 IVY ST SUITE B-100
DENVER, CO 80216
OFFICE: (303) 566-9914

PROJECT INFORMATION:
ALCAZAR SC
XXXX TRAILBLAZER WAY,
CASTLE ROCK, CO 80109
(DOUGLAS COUNTY)

REV	DATE	
D	07-24-25	PRELIMINARY
C	05-02-25	PRELIMINARY
B	11-03-23	PRELIMINARY
A	09-20-23	PRELIMINARY
7	07-27-22	100% PERMITTING CD's
6	02-23-22	100% PERMITTING CD's

DRAWN BY: DRB ISSUED FOR:
CHECKED BY: RPM

These plans have been reviewed by the Town of Castle Rock for concept only. The review does not imply responsibility by the reviewing department, the Town Engineer, or the Town of Castle Rock for accuracy and correctness of the calculations. Furthermore, the review does not imply that quantities of items on the plans are the final quantities required. The review shall not be construed for any reason as acceptance of financial responsibility by the Town for additional quantities of items shown that may be required during the construction phase. All work shall be constructed in accordance with the Town of Castle Rock Municipal Code, Technical Manuals and/or other Town-approved applicable standards.

INDEMNIFICATION AND ADHERENCE TO STANDARDS STATEMENTS

SEAL:
PRELIMINARY
DO NOT USE FOR CONSTRUCTION

I hereby affirm that these final construction plans were prepared under my direct supervision, in accordance with applicable Town of Castle Rock, Douglas County, Colorado standards to the best of my knowledge, belief, and that I am fully responsible for all design and revisions relative to said plans.

TOWN OF CASTLE ROCK APPROVAL PLANS ARE HEREBY APPROVED FOR ONE YEAR FROM DATE OF DEVELOPMENT SERVICES APPROVAL

APPROVED BY:

DEVELOPMENT SERVICES DATE

SHEET TITLE:
ELECTRICAL NOTES & UTILITY PLAN

SHEET 9 OF 11 REVISION: D
E-1
TEP #: 236764.403579

TEP is a family of companies licensed to provide different services in different jurisdictions. Depending on the jurisdiction, professional engineering and land surveying services are provided by TEP OpCo LLC, a Delaware limited liability company, TEP Engineering, PLLC, a New York professional limited liability company, or M&H Engineering, PLLC, a Delaware limited liability company. We acquire the requisite licenses in each state. Additional information can be obtained from the company.

MAXIMUM PANEL SCHEDULE - 125A, 120/240V, 1Ø, 3W

LOAD SERVED	VOLT AMPERES (WATTS) L1	VOLT AMPERES (WATTS) L2	TRIP	CKT #	PHASE	CKT #	TRIP	VOLT AMPERES (WATTS) L1	VOLT AMPERES (WATTS) L2	LOAD SERVED
6308 RECTIFIER	2000		30A	1	A	2	20A	80		AIR1672 ALPHA
		2000		3	B	4	20A		80	AIR1672 BETA
GFCI	180		20A	5	A	6	20A	80		AIR1672 GAMMA
FANS		600	20A	7	B	8	–		–	SPARE
–	–		–	9	A	10	–	–		SPARE
SPARE		–	–	11	B	12	–		–	SPARE
VOLT AMPS	2180	2600						180	80	VOLT AMPS

L1 VOLT AMPERES	2360	2680	L2 VOLT AMPERES
	2680	MAX VOLT AMPERES
	22.33	MAX AMPS
	27.92	AMPS X 125%

NOTES:

1. ELECTRICAL SERVICE SHALL BE 125A, 120/240V, 1ø 3 WIRE.
2. SERVICE SHALL BE INSTALLED WITH A LEVER TYPE DISCONNECT.
3. FOR COMPLETE INTERNAL WIRING AND ARRANGEMENT, REFER TO VENDOR PRINTS PROVIDED BY EQUIPMENT CABINET MANUFACTURER.
4. METER PEDESTAL AND METER BY CORE. SEE INTERNAL WIRING DIAGRAM PROVIDED BY MANUFACTURES.
5. WIRE AND CONDUIT SIZE BASED OFF A 25' POWER RUN WITH 28A AVAILABLE SERVICE. IF MORE THAN 200A OF CONDUIT IS USED, CONTACT TEP FOR NEW SIZING.
6. VERIZON SMALL CELL TOWER TO PULL 27.92A FROM ELECTRICAL SERVICE.

POWER PANEL SCHEDULE

SCALE: N.T.S.

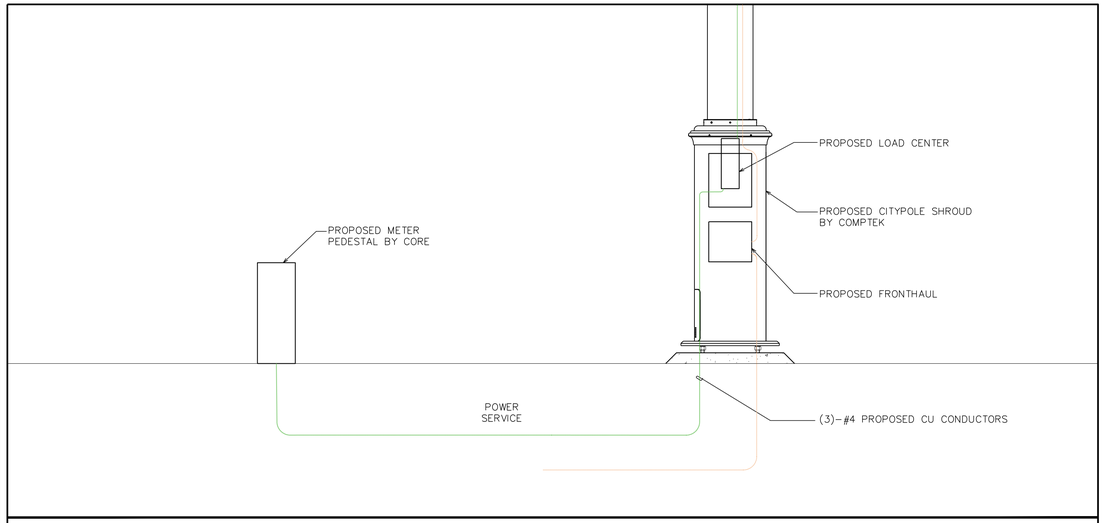

ONE-LINE ELEVATION

SCALE: N.T.S.

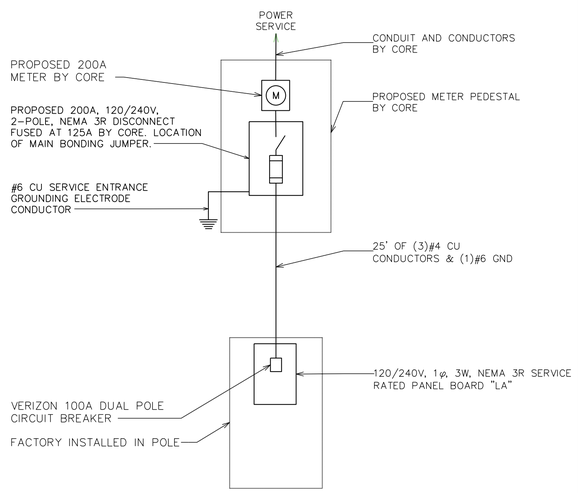

ONE LINE DIAGRAM

SCALE: N.T.S.

NOTES:

1. ACTUAL SEPARATION OF CONDUITS TO BE DETERMINED BY SITE SPECIFIC REQUIREMENTS.
2. PROVIDE PVC CONDUIT BELOW GRADE EXCEPT AS NOTED BELOW.
3. PROVIDE RGS CONDUIT AND ELBOWS AT STUB UP LOCATIONS (I.E. SERVICE POLES, EQUIPMENT, ETC.)
4. PROVIDE RGS CONDUIT FOR INSTALLATIONS BELOW PARKING LOTS AND ROADWAYS.

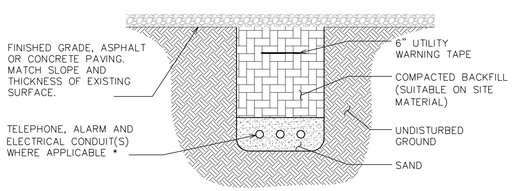

* SEPARATION DIMENSIONS TO BE VERIFIED WITH LOCAL UTILITY COMPANY REQUIREMENTS.

UNDERGROUND CONDUIT(S) TRENCHING DETAIL

SCALE: N.T.S.

LEGEND

	EXIST. PROPERTY LINE
	ADJ. PROPERTY LINE
	PROPERTY CORNER
	EXIST. UTILITY POLE
	TRAFFIC SIGNAL
	TRANSFORMER
R/W	RIGHT-OF-WAY
---OHW---	OVERHEAD WIRE
---UGW---	UNDERGROUND WIRE
---UGG---	UNDERGROUND GAS
---UGF---	UNDERGROUND FIBER
---UGT---	UNDERGROUND TELCO
--- WP ---	WATER PIPE
	EDGE OF PAVEMENT
	STREET SIGN
	LIGHT POLE
	FIRE HYDRANT
F SS SM T W	MAN HOLE (FIBER, SANITARY, STORM, TELCO, WATER)
E	ELECTRICAL PULL BOX
IC	IRRIGATION CONTROL VALVE
GV	GAS VALVE
WM	WATER METER
WV	WATER VALVE

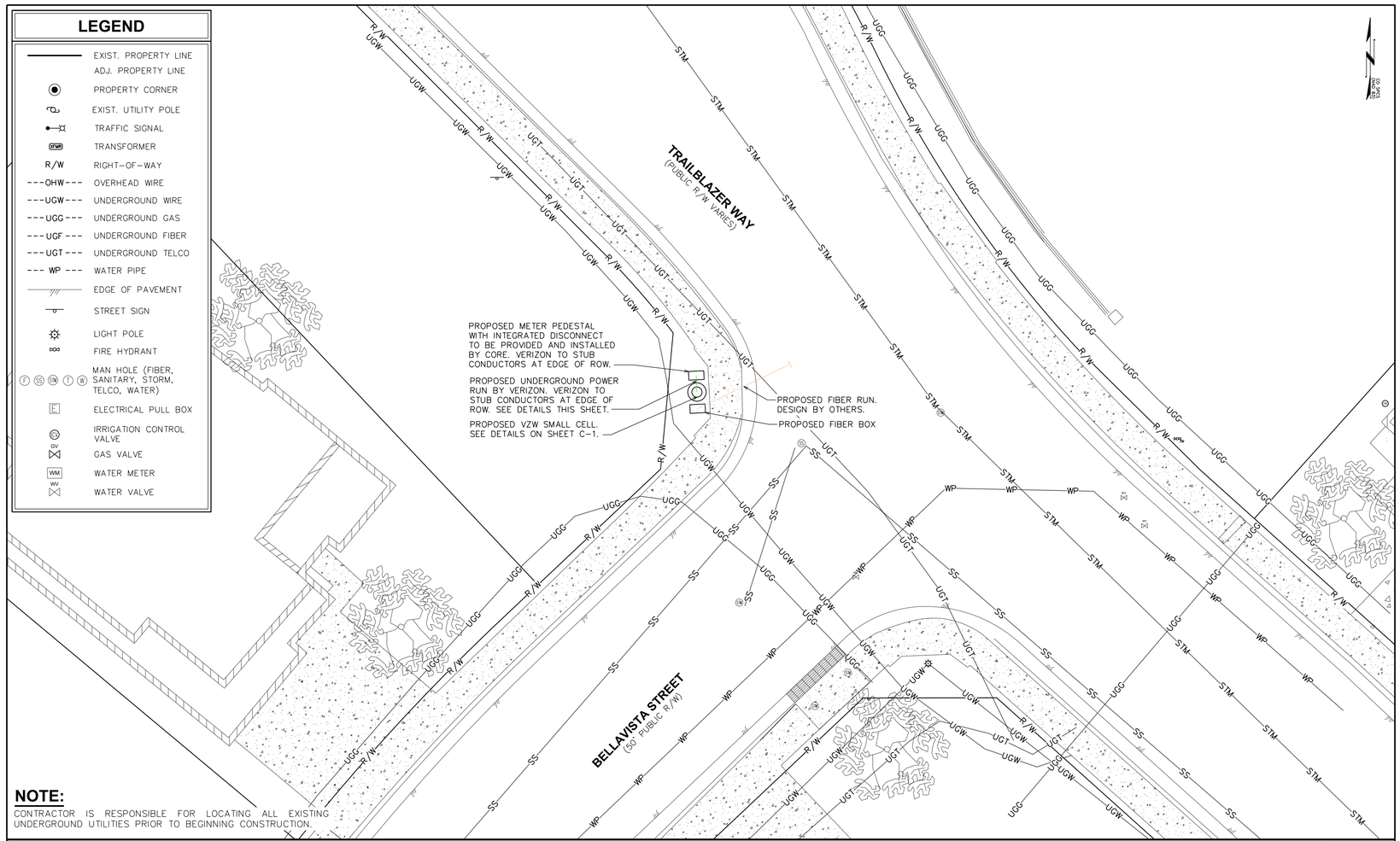

NOTE:

CONTRACTOR IS RESPONSIBLE FOR LOCATING ALL EXISTING UNDERGROUND UTILITIES PRIOR TO BEGINNING CONSTRUCTION.

POWER AND TELCO ROUTING PLAN

SCALE: 1" = 10'-0"

PLANS PREPARED FOR:

10000 PARK MEADOWS DR, SUITE 300
LONE TREE, CO 80124
(303) 489-7836

PLANS PREPARED BY:

TEP OPCO LLC
4570 IVY ST SUITE B-100
DENVER, CO 80216
OFFICE: (303) 566-9914

PROJECT INFORMATION:

ALCAZAR SC

XXXX TRAILBLAZER WAY,
CASTLE ROCK, CO 80109
(DOUGLAS COUNTY)

REV	DATE	DRAWN BY: DRS
D	07-24-25	PRELIMINARY
C	05-02-25	PRELIMINARY
B	11-03-23	PRELIMINARY
A	09-20-23	PRELIMINARY
7	07-27-22	100% PERMITTING CD's
6	02-23-22	100% PERMITTING CD's

ISSUED FOR:

CHECKED BY: RPM

These plans have been reviewed by the Town of Castle Rock for concept only. The review does not imply responsibility by the reviewing department, the Town Engineer, or the Town of Castle Rock for accuracy and correctness of the calculations. Furthermore, the review does not imply that quantities of items on the plans are the final quantities required. The review shall not be construed for any reason as acceptance of financial responsibility by the Town for additional quantities of items shown that may be required during the construction phase. All work shall be constructed in accordance with the Town of Castle Rock Municipal Code, Technical Manuals and/or other Town-approved applicable standards.

INDEMNIFICATION AND ADHERENCE TO STANDARDS STATEMENTS

SEAL:

PRELIMINARY
DO NOT USE FOR CONSTRUCTION

I hereby affirm that these final construction plans were prepared under my direct supervision, in accordance with all applicable Town of Castle Rock and State of Colorado laws, ordinances, regulations, standards and that I am fully responsible for all design and revisions relative to said plans.

TOWN OF CASTLE ROCK APPROVAL PLANS ARE HEREBY APPROVED FOR ONE YEAR FROM DATE OF DEVELOPMENT SERVICES APPROVAL

APPROVED BY:

DEVELOPMENT SERVICES DATE

SHEET TITLE:

ELECTRICAL DETAILS

SHEET 10 OF 11 | REVISION: D

E-2

TEP #: 236764.403579

TEP is a family of companies licensed to provide different services in different jurisdictions. Depending on the jurisdiction, professional engineering and land surveying services are provided by TEP OpCo LLC, a Delaware limited liability company. We acquire the requisite licenses in each state. Additional information can be obtained from the company.

TEP Engineering, PLLC, a North Carolina professional limited liability company, or M&H Engineering, PLLC, a New York professional limited liability company. General contractor services are provided by TEP OpCo LLC, a Delaware limited liability company. We acquire the

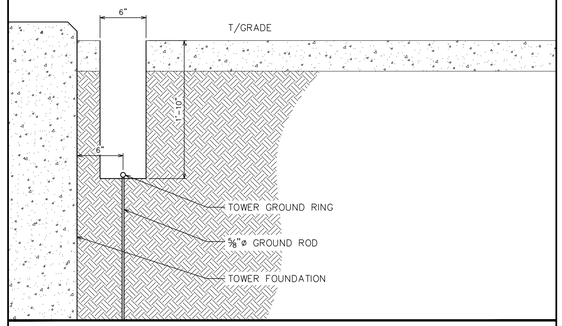

TRENCH DETAIL

SCALE: N.T.S.

NOTES:

GROUND BAR SHALL BE SIZED TO ACCOMMODATE ALL GROUNDING CONNECTIONS REQUIRED AS WELL AS PROVIDE 50% SPARE CAPACITY.

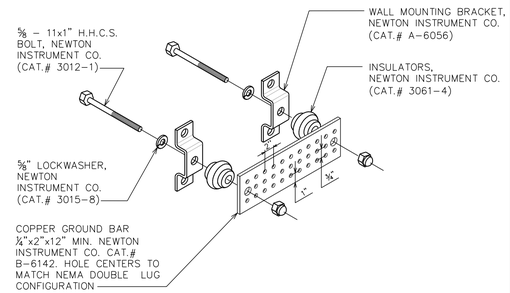

STANDARD GROUND BAR DETAIL

SCALE: N.T.S.

NOTES:

DO NOT INSTALL COAX GROUND KIT AT A BEND.

CONTRACTOR TO WEATHERPROOF COAX GROUND.

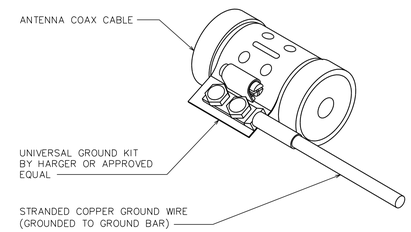

COAX GROUND KIT DETAILS

SCALE: N.T.S.

NOTE:

MINIMUM SPACING OF 12" BETWEEN ALL CADWELDS

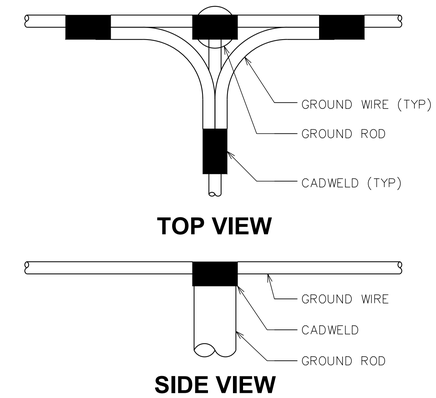

UFER GROUNDING DETAIL

SCALE: N.T.S.

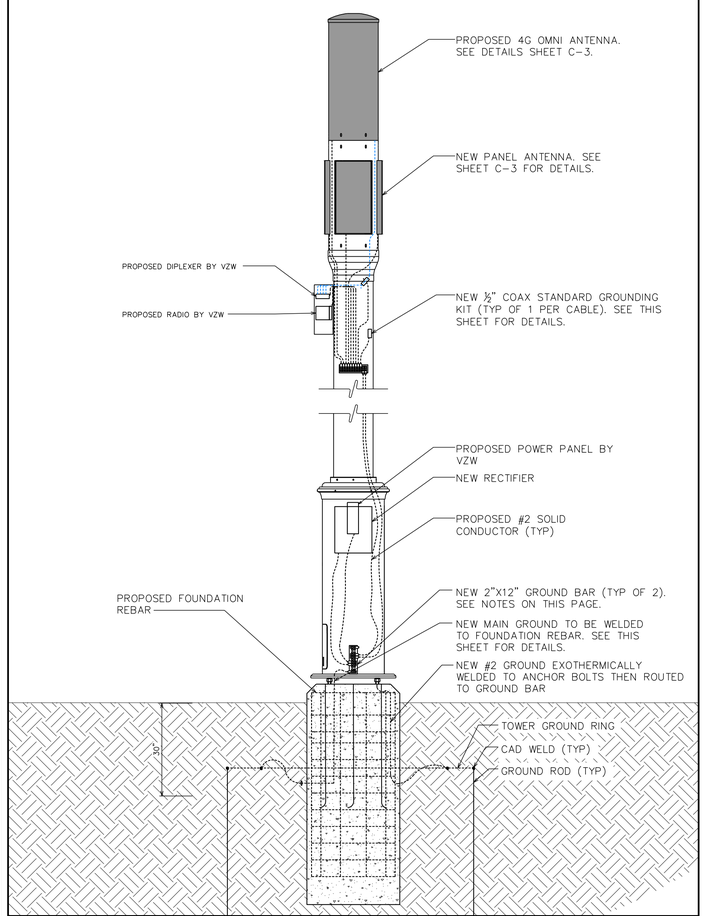

TOWER & EQUIPMENT GROUNDING ELEVATION

SCALE: N.T.S.

LEGEND

	EXIST. PROPERTY LINE
	ADJ. PROPERTY LINE
	PROPERTY CORNER
	EXIST. UTILITY POLE
	TRAFFIC SIGNAL
	TRANSFORMER
R/W	RIGHT–OF–WAY
---OHW---	OVERHEAD WIRE
---UGW---	UNDERGROUND WIRE
---UGG---	UNDERGROUND GAS
---UGF---	UNDERGROUND FIBER
---UGT---	UNDERGROUND TELCO
--- WP ---	WATER PIPE
	EDGE OF PAVEMENT
	STREET SIGN
	LIGHT POLE
	FIRE HYDRANT
T SS SM T W	MAN HOLE (FIBER, SANITARY, STORM, TELCO, WATER)
E	ELECTRICAL PULL BOX
CV	IRRIGATION CONTROL VALVE
GV	GAS VALVE
WM	WATER METER
WV	WATER VALVE

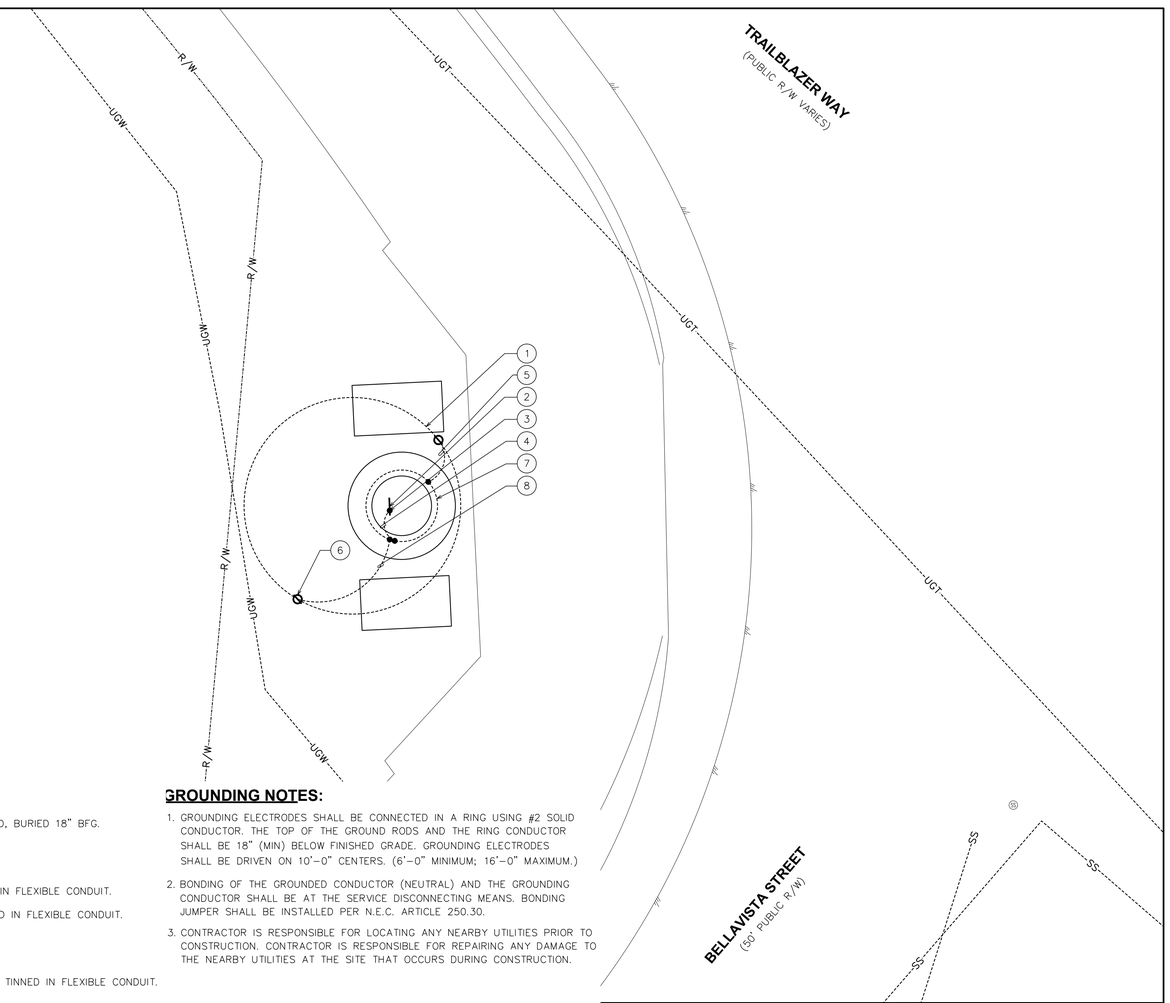

DRAWING NOTES:

1. TOWER GROUND RING– #2 COPPER CONDUCTOR–BARE TINNED, BURIED 18" BFG.
2. EQUIPMENT GROUND BAR
3. CAD WELD (TYP)
4. GROUND BAR LEAD– #2 COPPER CONDUCTOR–BARE TINNED IN FLEXIBLE CONDUIT.
5. TOWER GROUND LEAD– #2 COPPER CONDUCTOR–BARE TINNED IN FLEXIBLE CONDUIT.
6. ⅝"ø x 10' COPPER GROUND ROD (TYP)
7. FOUNDATION REBAR
8. ANCHOR BOLT GROUND LEAD–#2 COPPER CONDUCTOR–BARE TINNED IN FLEXIBLE CONDUIT.

GROUNDING NOTES:

1. GROUNDING ELECTRODES SHALL BE CONNECTED IN A RING USING #2 SOLID CONDUCTOR. THE TOP OF THE GROUND RODS AND THE RING CONDUCTOR SHALL BE 18" (MIN) BELOW FINISHED GRADE. GROUNDING ELECTRODES SHALL BE DRIVEN ON 10'–0" CENTERS. (6'–0" MINIMUM; 16'–0" MAXIMUM.)
2. BONDING OF THE GROUNDED CONDUCTOR (NEUTRAL) AND THE GROUNDING CONDUCTOR SHALL BE AT THE SERVICE DISCONNECTING MEANS. BONDING JUMPER SHALL BE INSTALLED PER N.E.C. ARTICLE 250.30.
3. CONTRACTOR IS RESPONSIBLE FOR LOCATING ANY NEARBY UTILITIES PRIOR TO CONSTRUCTION. CONTRACTOR IS RESPONSIBLE FOR REPAIRING ANY DAMAGE TO THE NEARBY UTILITIES AT THE SITE THAT OCCURS DURING CONSTRUCTION.

GROUNDING PLAN

SCALE: ½" = 1'–0"

0 2 4
SCALE IN FEET

PLANS PREPARED FOR:

10000 PARK MEADOWS DR. SUITE 300
LONE TREE, CO 80124
(303) 489–7836

PLANS PREPARED BY:

TEP OPCO LLC
4570 IVY ST SUITE B-100
DENVER, CO 80216
OFFICE: (303) 568-9914

PROJECT INFORMATION:

ALCAZAR SC

XXXX TRAILBLAZER WAY,
CASTLE ROCK, CO 80109
(DOUGLAS COUNTY)

REV	DATE	ISSUED FOR:
D	07-24-25	PRELIMINARY
C	05-02-25	PRELIMINARY
B	11-03-23	PRELIMINARY
A	09-20-23	PRELIMINARY
7	07-27-22	100% PERMITTING CD's
6	02-23-22	100% PERMITTING CD's

DRAWN BY: DRB CHECKED BY: RPM

These plans have been reviewed by the Town of Castle Rock for concept only. The review does not imply responsibility by the reviewing department, the Town Engineer, or the Town of Castle Rock for accuracy and correctness of the calculations. Furthermore, the review does not imply that quantities of items on the plans are the final quantities required. The review shall not be construed for any reason as acceptance of financial responsibility by the Town for additional quantities of items shown that may be required during the construction phase. All work shall be constructed in accordance with the Town of Castle Rock Municipal Code, Technical Manuals and/or other Town-approved applicable standards.

INDEMNIFICATION AND ADHERENCE TO STANDARDS STATEMENTS

SEAL:

PRELIMINARY
DO NOT USE FOR CONSTRUCTION

I hereby affirm that these final construction plans were prepared under my direct supervision, in accordance with the applicable Town of Castle Rock, and the State of Colorado standards and statutes, respectively, and that I am fully responsible for all design and revisions relative to said plans.

TOWN OF CASTLE ROCK APPROVAL PLANS ARE HEREBY APPROVED FOR ONE YEAR FROM DATE OF DEVELOPMENT SERVICES APPROVAL

APPROVED BY:

DEVELOPMENT SERVICES DATE

SHEET TITLE:

GROUNDING PLAN & DETAILS

SHEET 11 OF 11 REVISION: D

E-3

TEP #: 236764.403579

© Unauthorized use of AT&T Signature Network logo/Cellular Network logo EPS/.eps
TEP is a family of companies licensed to provide offered services in different jurisdictions. Depending on the jurisdiction, professional engineering and land surveying services are provided by TEP OpCo LLC, a Delaware limited liability company, TEP Engineering, PLLC, a North Carolina professional limited liability company, or AT&T Engineering, PLLC, a New York professional limited liability company. General contractor services are provided by TEP OpCo LLC, a Delaware limited liability company. We acquire the requisite licenses in each state. Additional information can be obtained from the company.