SQF, LLC

NODE NAME:

T-MOBILE PROJECT #: DN2020BA_31LAB (DN1462)
HUB ID# : DN02310A
SQF, LLC PROJECT # : TI5353
TOWN PROJECT # : CD25-0059

STRUCTURE TYPE:

PROPOSED SMALL CELL STANDALONE POLE

SITE ADDRESS

1991 FOOTHILLS DR
CASTLE ROCK, CO 80109

SITE COORDINATES*

LATITUDE: 39.386381°
LONGITUDE: -104.907467°
*COORDINATES PER 1A CERTIFICATE

DOUGLAS COUNTY, STATE OF COLORADO, TOWN OF CASTLE ROCK RIGHT-OF-WAY.

EXISTING STREET VIEW

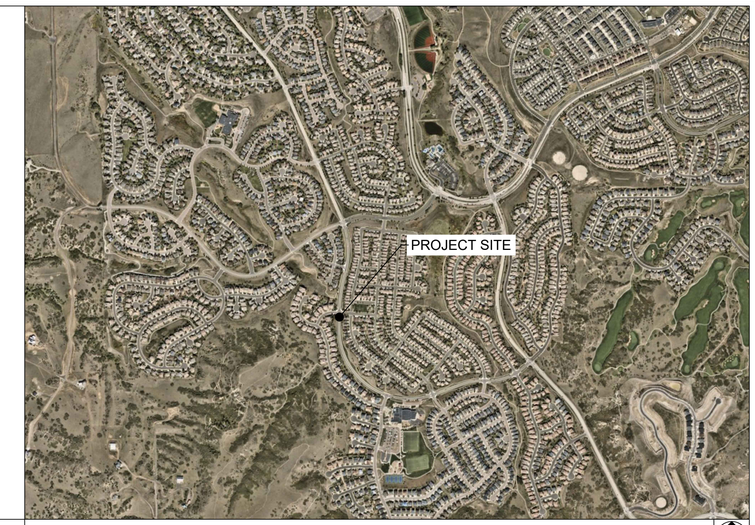

VICINITY MAP (SCALE = 1" = 1,000')

N

PROJECT TEAM

Kimley»Horn
KIMLEY HORN AND ASSOCIATES, INC.
6200 SOUTH SYRACUSE WAY, #300
GREENWOOD VILLAGE, CO 80111
CONTACT: MATT FLECK
PHONE: 720-647-6159

SQF, LLC
SQF, LLC
16 MIDDLE ST, 2ND FLOOR
PORTLAND, ME 04101
PHONE: 207-591-6427

CONSTRUCTION MANAGER
TIMOTHY HARRINGTON
TIMOTHY.HARRINGTON@ITGCOMM.COM
585-449-1659

PROPERTY OWNER: TOWN OF CASTLE ROCK
CASTLE ROCK, CO. 80108

UTILITIES: CORE ELECTRIC COOPERATIVE
5496 US-85
SEDALIA, CO 80135

SHEET INDEX

NAME	DESCRIPTION
T-1	TITLE SHEET
N-1	T.o.C.R. STANDARD NOTES I
N-2	T.o.C.R. STANDARD NOTES II
N-3	GENERAL NOTES
EX-1	TOWN OF CASTLE ROCK ROW EXHIBIT
C-1	SITE PLAN & LEGEND
C-2	ENLARGED SITE PLAN
C-3	SITE ELEVATION
C-3.1	CLEAR ZONE SIGHT ELEVATION
C-3.2	SIGHT DISTANCE PLAN
C-4	POLE EQUIPMENT ELEVATION & DETAILS
C-5	SIGNAGE DETAILS
C-6	HANDHOLE DETAILS
E-1	ELECTRICAL DETAILS
G-1	GROUNDING DETAILS
P-1	PHOTO SIMULATION

PROJECT SUMMARY

PROPOSED SMALL CELL LOCATED IN THE TOWN OF CASTLE ROCK RIGHT OF WAY
1. INSTALL NEW STANDALONE SMALL CELL POLE (BY SQF, LLC)
2. ANTENNAS MOUNTED ON POLE (BY SQF, LLC)
3. METER (BY CORE) INSTALLED ON PEDESTAL W/ SERVICE DISCONNECT (BY SQF, LLC)
4. DISCONNECT INTEGRATED INTO POLE
5. ASSOCIATED UTILITIES AND EQUIPMENT (BY SQF, LLC)

PROJECT INFORMATION CHECKLIST

SMALL CELL SITE ID:	DN2020BA_31LAB (DN1462)
LATITUDE:	39.386381°
LONGITUDE:	-104.907467°
NEAREST INTERSECTION:	FOOTHILLS DR & OPPORTUNITY DR

	PROPOSED
	STANDALONE POLE
POLE HEIGHT:	30'-0"
POLE OWNER:	SQF, LLC
POLE COLOR:	TRAFFIC BLACK

DRIVING DIRECTIONS

1. FROM DENVER INTERNATIONAL AIRPORT, TAKE PENA BLVD TO I-70 W.
2. TAKE I-70 TO EXIT 282 FOR I-225 S TOWARD COLORADO SPRINGS/AURORA.
3. TAKE EXIT 1A TO MERGE ONTO I-25 S FOR COLORADO SPRINGS.
4. USE THE RIGHT LANE TO TAKE EXIT 184 FOR US-85 N/MEADOWS PKWY
5. FOLLOW SIGNS FOR SEDALIA/CASTLETON DR/US-85 AND MERGE ONTO US-85 N/MEADOWS PKWY
6. CONTINUE ON MEADOWS BLVD
7. TURN LEFT ONTO MORNING VIEW DR
8. TURN LEFT ON FOOTHILLS DR
9. ARRIVE AT FOOTHILLS DR, SITE WILL BE LOCATED ON THE LEFT

PROJECT INFORMATION

SQF, LLC SITE NAME:	TI5353
PROJECT DESCRIPTION:	PROPOSED SMALL CELL STANDALONE IN R.O.W.
STRUCTURE TYPE:	STANDALONE SMALL CELL POLE
JURISDICTION:	TOWN OF CASTLE ROCK
AREA OF CONSTRUCTION:	35 S.F. ±
STRUCTURE HEIGHT:	30'-0" (OVERALL HEIGHT - TOP OF ANTENNA)
ANTENNA RAD CENTER:	28'-11" AGL
ZONING:	PD - PLANNED DEVELOPMENT

CODE COMPLIANCE

BUILDING CODE:	2024 IBC
ELECTRIC CODE:	2023 NEC
USE GROUP:	U-UTILITY
CONSTRUCTION TYPE:	I-B

811 Know what's below. Call before you dig.

INDEMNIFICATION AND ADHERENCE TO STANDARDS STATEMENT

THESE PLANS HAVE BEEN REVIEWED BY THE TOWN OF CASTLE ROCK FOR CONCEPT ONLY. THE REVIEW DOES NOT IMPLY RESPONSIBILITY BY THE REVIEWING DEPARTMENT, THE TOWN ENGINEER OR THE TOWN OF CASTLE ROCK FOR ACCURACY AND CORRECTNESS OF THE CALCULATIONS. FURTHERMORE, THE REVIEW DOES NOT IMPLY THAT QUANTITIES OF ITEMS ON THE PLANS ARE THE FINAL QUANTITIES REQUIRED. THE REVIEW SHALL NOT BE CONSTRUED FOR ANY REASON AS ACCEPTANCE OF FINANCIAL RESPONSIBLITY BY THE TOWN FOR ADDITIONAL QUANTITES OF ITEMS SHOWN THAT MAY BE REQUIRED DURING THE CONSTRUCTION PHASE.
ALL WORK SHALL BE CONSTRUCTED IN ACCORDANCE WITH THE TOWN OF CASTLE ROCK MUNICIPAL CODE, TECHNICAL MANUALS AND/OR OTHER TOWN-APPROVED APPLICABLE STANDARDS.

ANY REFERENCE TO 'TILSON' CONTAINED WITHIN THESE PLANS OR SUPPORTING DOCUMENTS SHALL BE DEEMED TO REFER TO SQF, LLC. SQF, LLC ASSUMES ALL RIGHTS, RESPONSIBILITIES, LIABILITIES, AND OBLIGATIONS ASSOCIATED WITH THESE PLANS AND THE WORK PERFORMED THEREUNDER.

SITE SUBMITTAL INFORMATION

WIRELESS SITE ID NO. & ADDRESS	STREET NAME / INTERSECTION AND QUADRANT POLE IS LOCATED ON	STATE PLANE COORDINATES		EXISTING POLE TYPE	EXISTING POLE HEIGHT
		EASTING (X)	NORTHING (Y)		
DN2020BA_31LAB (DN1462) 1991 FOOTHILLS DR CASTLE ROCK, CO 80109	INTERSECTION STREET NAMES: FOOTHILLS DR & OPPORTUNITY DR QUADRANT: F13	39.386381°	-104.907467°	N/A	N/A

SQF, LLC
16 MIDDLE ST, 4TH FLOOR
PORTLAND, ME 04101

PUBLIC WORKS CONSTRUCTION DOCUMENT

TOWN PROJECT NUMBER:
CD25-0059

PLANS PREPARED BY:

Kimley»Horn
6200 S SYRACUSE WAY. #300
GREENWOOD VILLAGE, CO 80111
PHONE (303) 228-2300
WWW.KIMLEY-HORN.COM

REV:	DATE:	DESCRIPTION:	BY:
3	09/25/26	REVISED: POLE HEIGHT	WSG
2	12/16/25	REVISED:CITY COMMENTS	JAC
1	11/20/25	REVISED: CITY COMMENTS	WBB
0	09/02/25	100% FINAL CDs	SJB

DRAWN BY:	CHECKED BY:
SJB	XMJ

KHA PROJECT NUMBER:
296015001

TOWN APPROVAL BLOCK

TOWN OF CASTLE ROCK APPROVAL PLANS ARE HEREBY APPROVED FOR ONE YEAR FROM DATE OF DEVELOPMENT SERVICES APPROVAL

APPROVED BY:

DEVELOPMENT SERVICES

DATE

FOR REVIEW

PROJECT INFORMATION:

NODE NAME: DN2020BA_31LAB (DN1462)

1991 FOOTHILLS DR
CASTLE ROCK, CO 80109
DOUGLAS COUNTY

SHEET TITLE:

TITLE SHEET

SHEET NUMBER:

T-1 (1 OF 16)

TOWN OF CASTLE ROCK STANDARD NOTES:

1. ALL MATERIALS, WORKMANSHIP AND CONSTRUCTION OF PUBLIC IMPROVEMENTS SHALL MEET OR EXCEED THE STANDARDS AND SPECIFICATIONS SET FORTH IN THE TOWN OF CASTLE ROCK (TCR) MUNICIPAL CODE, TCR TECHNICAL MANUALS AND APPLICABLE STATE AND FEDERAL REGULATIONS. WHERE THERE IS CONFLICT BETWEEN THESE PLANS AND THE TECHNICAL MANUAL OR ANY APPLICABLE STANDARDS, THE MORE STRINGENT STANDARD SHALL APPLY. ALL WORK SHALL BE INSPECTED AND APPROVED BY THE TCR CONSTRUCTION INSPECTOR.
2. THE CONTRACTOR IS SPECIFICALLY CAUTIONED THAT THE LOCATION AND/OR ELEVATIONS OF EXISTING UTILITIES AS SHOWN ON THESE PLANS IS BASED ON RECORDS OF THE VARIOUS UTILITY COMPANIES AND WHERE POSSIBLE, MEASUREMENTS TAKEN IN THE FIELD. THE INFORMATION IS NOT TO BE RELIED UPON AS BEING EXACT OR COMPLETE.
3. THE CONTRACTOR MUST CALL THE LOCAL UTILITY LOCATION CENTER AT LEAST 72 HOURS BEFORE ANY EXCAVATION TO REQUEST EXACT FIELD LOCATIONS OF THE UTILITIES. PRIOR TO CONSTRUCTION, THE CONTRACTOR SHALL VERIFY PERTINENT LOCATIONS AND ELEVATIONS, ESPECIALLY AT CONNECTION POINTS AND AT POTENTIAL UTILITY CONFLICTS. IT SHALL BE THE RESPONSIBILITY OF THE CONTRACTOR TO RELOCATE ALL EXISTING UTILITIES THAT CONFLICT WITH THE PROPOSED IMPROVEMENTS SHOWN ON THESE PLANS.
4. THE CONTRACTOR SHALL COORDINATE AND COOPERATE WITH THE TOWN AND ALL UTILITY COMPANIES INVOLVED WITH REGARD TO RELOCATIONS OR ADJUSTMENTS OF EXISTING UTILITIES DURING CONSTRUCTION AND TO ASSURE THAT THE WORK IS ACCOMPLISHED IN A TIMELY FASHION AND WITH A MINIMUM DISRUPTION OF SERVICE. THE CONTRACTOR SHALL BE RESPONSIBLE FOR CONTACTING ALL PARTIES AFFECTED BY ANY DISRUPTION OF ANY UTILITY SERVICE.
5. CONTRACTOR SHALL PROVIDE A MINIMUM OF SEVENTY-TWO (72) HOURS NOTICE TO THE ON-SITE TCR CONSTRUCTION INSPECTOR, (720)-733-2200, PRIOR TO MAKING ANY CONNECTIONS/TIE-INS TO EXISTING WATER, SANITARY AND/OR STORM SEWER SYSTEMS PROVIDED THAT THE UTILITY TIE-IN DOES NOT DISRUPT SERVICE TO EXISTING CR WATER CUSTOMERS. IF THE TIE-IN WILL DISRUPT UTILITY SERVICE, THEN CONTRACTOR SHALL PROVIDE A MINIMUM OF THREE (3) WEEKS NOTICE TO THE TCR CONSTRUCTION INSPECTOR TO ALLOW TIME FOR CR WATER TO PROVIDE WRITTEN NOTIFICATION TO EXISTING CUSTOMERS AFFECTED BY THE TIE-IN. ALL TOWN UTILITY TIE-INS MUST BE APPROVED BY CR WATER PRIOR TO COMMENCING WORK.
6. THE CONTRACTOR SHALL HAVE ONE (1) SIGNED COPY OF THE APPROVED PLANS, ONE (1) COPY OF THE APPROPRIATE CRITERIA AND SPECIFICATIONS AND A COPY OF ANY PERMITS AND EXTENSION AGREEMENTS NEEDED FOR THE JOB ONSITE AT ALL TIMES.
7. THE CONTRACTOR SHALL BE RESPONSIBLE FOR ALL ASPECTS OF SAFETY INCLUDING, BUT NOT LIMITED TO, EXCAVATION, TRENCHING, SHORING, TRAFFIC CONTROL AND SECURITY.
8. IF DURING THE CONSTRUCTION PROCESS CONDITIONS ARE ENCOUNTED WHICH COULD INDICATED A SITUATION THAT IS NOT IDENTIFIED IN THE PLANS OR SPECIFICATIONS, THE CONTRACTOR SHALL CONTACT THE TCR CONSTRUCTION INSPECTOR IMMEDIATELY.
9. ALL REFERENCES TO ANY PUBLISHED STANDARDS SHALL REFER TO THE LATEST REVISION OF SAID STANDARD UNLESS SPECIFICALLY STATED OTHERWISE.
10. THE CONTRACTOR SHALL SUBMIT A TRAFFIC CONTROL PLAN IN ACCORDANCE WITH MUTCD TO THE APPRORIATE RIGHT-OF-WAY AUTHORITY (TOWN, COUNTY, OR STATE) FOR APPROVAL PRIOR TO ANY CONSTRUCTION ACTIVITIES WITHIN OR AFFECTING THE RIGHT-OF-WAY. THE CONTRACTOR SHALL BE RESPONSIBLE FOR PROVIDING ANY AND ALL TRAFFIC CONTROL DEVICES AS MY BE REQUIRED BY THE CONSTRUCTION ACTIVITIES.
11. THE CONTRACTOR IS RESPONSIBLE FOR PROVIDING ALL LABOR AND MATERIALS NECESSARY FOR THE COMPLETION OF THE INTEDED IMPROVEMENTS SHOWN ON THESE DRAWINGS OR AS DESIGNATED TO BE PROVIDED, INSTALLED OR CONSTRUCTED UNLESS SPECIFICALLY NOTED OTHERWISE.
12. THE CONTRACTOR SHALL BE RESPONSIBLE FOR RECORDING AS-BUILD INFORMATION ON A SET OF RECORD DRAWINGS KEPT ON THE CONSTRUCTIONS SITE AND AVAILABLE TO THE TCR CONSTRUCTION INSPECTOR AT ALL TIMES.
13. DIMENSIONS FOR LAYOUT AND CONSTRUCTION ARE NOT TO BE SCALED FROM ANY DRAWING. IF PERTINENT DIMENSIONS ARE NOT SHOWN, CONTACT THE CONSULTANT ENGINEER FOR CLARIFICATION AND ANNOTATE THE DIMENSION ON THE AS-BUILT RECORD DRAWINGS.
14. ALL INITIAL SEDIMENT CONTROL MEASURES SHALL BE INSTALLED PER THE TEMPORARY EROSION & SEDIMENT CONTROL (TESC) PLAN PRIOR TO ANY EARTH-DISTURBING ACTIVITY. ALL EROSION AND SEDIMENT CONTROL PRACTICES MUST BE MAINTAINED IN EFFECTIVE OPERATING CONDITIONS AT ALL TIMES. REMOVAL SHALL BE RESPONSIBLE FOR KEEPING ROADWAYS FREE AND CLEAR OF ALL CONSTRUCTION DEBRIS AND DIRT TRACKED FROM THE SITE. THE CONTRACTOR SHALL ALSO COMPLY WITH ALL TERMS AND CONDITIONS OF THE COLORADO CONSTRUCTION GENERAL PERMIT FOR STORMWATER DISCHARGES.
15. THE CONTRACTOR SHALL PROVIDE AN ACTION PLAN IMMEDIATELY FOLLOWING THE PRE-CONSTRUCTION MEETING DETAILING SUFFICIENT MEANS TO MITIGATE DUST ON SITE DURING OVERLOT GRADING, ROCK CRUSHING OR OTHER EARTHWORK ACTIVITIES. IF THE CONTRACTOR FAILS TO CONTROL DUST, ALL EARTH DISTURBING ACTIVITIES SHALL BE STOPPED UNTIL SUFFICIENT MEASURES ARE TAKEN TO THE TOWN'S SATISFACTION. THE CONTRACTOR SHALL ALSO COMPLY WITH ALL TERMS AND CONDITIONS OF THE COLORADO AIR QUALITY REGULATIONS FOR LAND DEVELOPMENT, AS REQUIRED.
16. THE CONTRACTOR SHALL SEQUENCE INSTALLATION OF UTILITIES IN SUCH A MANNER AS TO MINIMIZE POTENTIAL UTILITY CONFLICTS. IN GENERAL, STORM SEWER AND SANITARY SEWER SHOULD BE CONSTRUCTED PRIOR TO INSTALLATION FO THE WATER LINES AND DRY UTILITIES.
17. THERE SHALL BE NO SITE CONSTRUCTION ACTIVITIES ON SATURDAYS UNLESS SPECIFICALLY APPROVED BY THE TCR CONSTRUCTION INSPECTOR AND NO SITE CONSTRUCTION ACTIVITIES ON SUNDAYS OR HOLIDAYS UNLESS THERE IS PRIOR WRITTEN APPROVAL BY THE PUBLIC WORKS DIRECTOR.
18. NO SOLID OBJECT (EXCLUDING FIRE HYDRANTS, TRAFFIC CONTROL DEVICES AND TRAFFIC SIGNS) EXCEEDING THIRTY (30) INCHES IN HEIGHT ABOVE THE FLOWLINE ELEVATION OF THE ADJACENT STREET, INCLUDING BUT NOT LIMITED TO BUILDINGS, UTILITY CABINETS, WALLS, FENCES, LANDSCAPE PLANTINGS, CROPS, CUT SLOPES AND BERMS SHALL BE PLACED WITHIN SIGHT DISTANCE LINES AND SIGHT DISTANCE EASEMENTS.
19. THIS PROPERTY IS LOCATED WITHIN ZONE X AS PER FEMA FIRM PANEL NO. 08035C0168G DATED 03/16/2016. FLOOD ZONE "X" IS DEFINED AS: AREAS DETERMINED TO BE OUTSIDE THE 1% AND 0.2% ANNUAL CHANCE FLOODPLAINS.
20. NEAREST BENCHMARK LOCATED IN DOUGLAS COUNTY, CO AT N N 39° 22' 38.82489", W 104° 54' 59.69331". LOCATED ABOUT 3 MILES (4.8 KM) WEST OF CASTLE ROCK,COLORADO, IN A CUL-DE-SAC AT THE NORTH END OF FAVER ROAD, IN SECTION 5, TOWNSHIP 8 SOUTH, RANGE 67 WEST OF THE 6TH P.M. OWNERSHIP--DOUGLAS COUNTY. TO REACH THE STATION FROM THE INTERSECTION OF INTERSTATE 25 AND WOLFENSBURGER ROAD (WILCOX IF TRAVELING EAST) IN CASTLE ROCK, GO WEST ON WOLFENSBURGER ROAD FOR 3.8 MILES (6.1 KM) TO FAVER ROAD, GO NORTH ON FAVER ROAD FOR 1.14 MILES (1.83 KM) TO THE STATION OF THE WEST SIDE OF THE CUL DE SAC, (FAVER ROAD IS A DIRT ROAD). THE STATION IS A BRASS DISK SET IN CONCRETE FLUSH WITH THE GROUND AND MARKED WITH A DOUGLAS COUNTY FIBERGLASS WITNESS POST, IT IS 14.3 FEET (4.4 M) EAST OF A BRASS SHINNER 22568 ON A CORNER POST WHERE THREE FENCE JOIN ON THE WEST SIDE OF FAVER RD, 122 FEET (37.2 M) NORTHWEST OF A BRASS SHINNER 22568 ON A POWER POLE ON THE EAST SIDE OF FAVER RD AND SOUTH OF THE CUL-DE-SAC, AND 103.5 FEET (31.5 M) SOUTHWEST OF A BRASS SHINNER 22568 ON A POWER POLE ON THE EAST SIDE OF FAVER RD AND NORTH OF THE CUL-DE-SAC. (ELEV. 6381') NAVD 88.
21. ELEVATIONS SHOWN HEREON ARE REPRESENTED IN NORTH AMERICAN VERTICAL DATUM OF 1988 (NAVD88) ESTABLISHED FROM GPS DERIVED ELLIPSOID HEIGHTS, APPLYING GEOID 12B SEPARATIONS CONSTRAINING TO NGS CORS STATIONS PROVIDED IN THE "ONLINE POSITIONING USER SERVICE" (OPUS) SOLUTION FOR THIS SPECIFIC SITE. BEARINGS SHOWED HEREON ARE BASED UPON U.S. STATE PLANE COORDINATE SYSTEM COLORADO STATE PLANE COORDINATE ZONE CENTRAL, DETERMINED BY GPS OBSERVATIONS.

STREET CONSTRUCTION NOTES:

1. ALL STREET CONSTRUCTION IS SUBJECT TO THE TCR GENERAL NOTES ON THE COVER SHEET OF THESE PLANS AS WELL AS THE STREET CONSTRUCTION NOTES LISTED HERE.
2. A PAVING SECTION DESIGN, SIGNED AND SEALED BY A COLORADO REGISTERED PROFESSIONAL ENGINEER, MUST BE SUBMITTED TO THE TCR PUBLIC WORKS DEPARTMENT FOR APPROVAL PRIOR TO ANY STREET CONSTRUCTIONS ACTIVITY (FULL-DEPTH ASPHALT SECTIONS ARE NOT PERMITTED AT A DEPTH GREATER THAN 8" ASPHALT). THE JOB MIS SHALL BE SUBMITTED FOR APPROVAL PRIOR TO PLACEMENT OF ANY ASPHALT.
3. WHERE PROPOSED PAVING ADJOINS EXISTING ASPHALT, THE EXISTING ASPHALT SHALL BE SAW CUT A MINIMUM DISTANCE OF 12" FROM THE EXISTING EDGE TO CREATE A CLEAN CONSTRUCTION JOINT. THE DEVELOPER SHALL BE REQUIRED TO REMOVE EXITING PAVEMENT TO A DISTANCE WHERE A CLEAN CONSTRUCTION JOINT CAN BE MADE.
4. STREET SUBGRADES SHALL BE SACRIFICED TO A MINIMUM DEPTH OF 12" AND RE-COMPACTED PRIOR TO SUB-BASE INSTALLATION. NO BASE MATERIAL SHALL BE LAID UNTIL THE SUBGRADE HAS BEEN INSPECTED AND APPROVED BY THE TCR CONSTRUCTION INSPECTOR.
5. VALVE BOXES ARE TO BE BROUGHT UP TO GRADE AT TIME OF PAVEMENT PLACEMENT OR OVERLAY. VALVE BOX ADJUSTING RINGS ARE NOT ALLOWED.

SIGNAGE AND STRIPING NOTES:

1. ALL SIGNAGE AND STRIPING IS SUBJECT TO THE TCR GENERAL NOTES ON THE COVER SHEET OF THESE PLANS AS WELL AS THE SIGNAGE AND STRIPING NOTES LISTED HERE.
2. ALL PAINT SHALL BE 15 MIL THICK UPON INSTALLATION AND 8 MIL THICK WHEN DRY.
3. ALL PERMANENT LONGITUDINAL PAVEMENT STRIPING ON ASPHALT SURFACES (CENTERLINES, LANE LINES, BAY LINES ETC.) SHALL BE INSTALLED USING AN APPROVED REFLECTIVE TRAFFIC PAINT OR PAVEMENT MARKING TAPE. REFLECTIVE BEADS SHALL BE APPLIED IN ACCORDANCE WITH CDOT'S STANDARD SPECIFICATIONS FOR ROAD AND BRIDGE CONSTRUCTIONS AND THE MANUFACTURER'S REQUIREMENT. WHEN TAPE IS USED ON AN ASPHALT STREET, IT SHALL BE "ROLLED" INTO THE FINAL LIFT. ON CONCRETE SURFACES TAPE SHALL BE UTILIZED WITH A CONSTRAINING BLACK EDGE AND GROOVED INTO THE PAVEMENT.
4. THERMO-PLASTIC APPLICATIONS SHALL BE AS SPECIFIED IN THE PLANS AND/OR PER TOWN CRITERIA.
5. ALL SURFACES THAT ACCEPT PAINT/THERMO-PLASTIC STRIPING OR PRE-FORMED MARKINGS SHALL BE FIRST SANDBLASTED AND THOROUGHLY CLEANED PRIOR TO INSTALLATION OF STRIPING OR MARKINGS.
6. ALL ARROW MARKINGS SHALL BE PRE-FORMED TAPE, THERMO-PLASTIC OR EPOXY-PAINTED.
7. STOP BARS SHALL BE 90 MIL THERMO-PLASTIC.
8. ALL ROADWAY SIGNAGE SHALL CONFORM TO THE MUTCD AND/OR TOWNS CRITERIA.
9. ALL SIGNPOSTS SHALL UTILIZE BREAKAWAY ASSEMBLIES AND FASTENERS, PER THE TCR STANDARD DETAIL.

FIRE NOTES:

1. IT IS THE RESPONSIBILITY OF THE PROPERTY OWNER TO MAINTAIN DRIVE LANES FOR EMERGENCY VEHICLE INGRESS AND EGRESS, INCLUDING SNOW REMOVAL.
2. EMERGENCY VEHICLE ACCESS ROAD IS REQUIRED TO ALLOW ACCESS WITHIN 150' OF ALL EXTERIOR OF THE BUILDING BY AN APPROVED ROUTE.
3. FIRE APPARATUS ACCESS ROADS SHALL BE DESIGNED AND MAINTAINED TO SUPPORT THE IMPOSED LOADS OF FIRE APPARATUS AND SHALL BE PROVIDED WITH A SURFACE SO AS TO PROVIDE ALL-WEATHER DRIVING CAPABILITIES. ACCESS ROAD SHALL BE EITHER CONCRETE, ASPHALT OR OTHER APPROVED ALTERNATIVE MATERIAL ACCOMPANIED WITH AN ENGINEER'S STAMP STATING THE MATERIAL WILL SUPPORT A 75000 POUND IMPOSED LOAD.
4. FIRE HYDRANT(S) ARE REQUIRED TO BE INSTALLED AND MADE SERVICEABLE PRIOR TO COMBUSTIBLE MATERIALS BEING BROUGHT ONTO THE SITE AND DURING THE TIME OF VERTICAL CONSTRUCTION.
5. "NO PARKING FIRE LANE" SIGNS ARE REQUIRED IN AREA THAT MEET THE FOLLOWING CRITERIA AND IN AREAS DESIGNATED BY THE FIRE PREVENTION BUREAU. SIGNS SHALL BE POSTED ON BOTH SIDES OF FIRE DEPARTMENT ACCESS ROADWAYS, PUBLIC OR PRIVATE ROADWAYS AND DRIVEWAYS LESS THAN 26 FEET WIDE. SIGNS SHALL BE POSTED ON ONE SIDE ONLY OF FIRE DEPARTMENT ACCESS ROADWAYS, PUBLIC OR PRIVATE ROADWAYS OR DRIVEWAYS LESS THAN 26 FEET WIDE. SIGNS SHALL BE POSTED ON ONE SIDE ONLY OF FIRE DEPARTMENT ACCESS ROADWAY FIRE DEPARTMENT ACCESS ROADWAYS, PUBLIC OR PRIVATE ROADWAYS OR DRIVEWAYS EXCEEDING 32 FEET WIDE.
6. WHEN FIRE APPARATUS ACCESS ROADS OR A WATER SUPPLY FOR FIRE PROTECTION IS REQUIRED TO BE INSTALLED, SUCH PROTECTION SHALL BE INSTALLED AND MADE SERVICEABLE PRIOR TO COMBUSTIBLE MATERIALS BEING BROUGHT ONTO THE SITE AND BUILDING CONSTRUCTION GOING VERTICAL.
7. TRACER WIRE SHALL BE INSTALLED ON ALL FIRE SERVICE LINES AND AT ALL FIRE HYDRANTS. REFER TO TCR STANDARDS DETAILS, THE WATER LINE CONSTRUCTION NOTES AND THE TRACER WIRE INSTALLATION NOTES LISTED HEREIN.

WATER LINE CONSTRUCTION NOTES:

1. ALL WATER LINE CONSTRUCTION IS SUBJECT TO THE GENERAL NOTES ON THE COVER SHEET OF THESE PLANS AS WELL AS THE WATER LINE CONSTRUCTION NOTES LISTED HEREIN.
2. ALL WATER LINES SHALL BE: 1) DUCTILE IRON PIPE (DIP, CONFORMING TO THE REQUIREMENTS OF AWWA C150, CL350 (6"-12"), CL250 (16"-20"), CL200 (>24"), WITH PUSH-ON GASKETED JOINTS OR MECHANICAL JOINT ENDS, IN CONFORMANCE WITH AWWA C111. PIPE SHALL BE CEMENT-LINED IN ACCORDANCE WITH AWWA C104 AND AN EXTERIOR COATING IN ACCORDANCE WITH C151; OR 2) PVC PIPE, CONFORMING TO AWWA C900 FOR PIPE SIZES 8" AND 12", CL305 (DR14) AND AWWA C905 FOR PIPE SIZE OF 16", CL235 (DR18). MINIMUM DISTRIBUTION MAIN SIZE SHALL BE 8". WATER LINES THAT ARE 10", 14" AND 18" DIAMETER ARE NOT PERMITTED.
3. WATER LINE FITTINGS SHALL BE DIP CONFORMING TO AWWA C153 OR C110 AND SHALL HAVE A PRESSURE RATING NOT LESS THAN THE PIPE. ALL FITTINGS SHALL BE MECHANICAL JOINT, UNLESS APPROVED BY CASTLE ROCK WATER.
4. ALL DIP AND FITTINGS SHALL BE ENCASED IN POLYETHYLENE TO PREVENT CORROSION. POLYEHTYLENE WRAP, TAPE AND INSTALLATION SHALL MEET THE REQUIREMENTS OF AWWA C105.
5. GATE VALVES SHALL BE DESIGNED AND MANUFACTURED IN ACCORDANCE WITH AWWA C509-1 AND AWWA C515-01, AS APPROPRIATE AND SHALL BE DUCTILE IRON BODY AND BONNET, RESILIENT-SEATED WEDGE GATE, NON-RISING STEM TYPE, O-RING SEALS AND SLIP-ON CONNECTIONS (TAPPING VALVES, WHERE ALLOWED SHALL BE FLANGE X MJ). VALVE ENDS SHALL BE MECHANICAL JOINT, UNLESS OTHERWISE SPECIFIED IN THE PLANS. THE VALVES SHALL BE SUITABLE FOR A WORKING PRESSURE OF 200 PSI. THEY SHALL BE CLOSED BY TURNING CLOCKWISE AND SHALL HAVE TWO-INCH SQUARE CAST IRON OPERATING NUTS WITH AN ARROW CAST IN THE NUT INDICATING THE DIRECTION OF OPENING. VALVES SHALL BE POLYETHYLENE WRAPPED IN ACCORDANCE WITH THE AWWA C105. THEY SHALL BE OF SUCH DESIGN AS TO MAINTAIN THE FULL AREA OF THE PIPE THROUGH THE VALVE WHEN OPEN AND SHALL BE DESIGNED TO TAKE FULL PRESSURE ON EITHER FACE. VALVE SHALL HAVE TYPE 304 STAINLESS STEEL BONNET BOLTS AND NUTS AND TYPE 304 STAINLESS STEEL O-RING GLAND BOLTS AND NUTS. VALVES SHALL BE MANUFACTURED BY AMERICAN FLOW CONTROL, KENNEDY OR MUELLER AND SHALL HAVE THE MANUFACTURER'S NAME OR INITIALS AND THE PRESSURE RATING CAST ON THE BODY.
6. ALL FIRE HYDRANTS SHALL BE "PACER WB67-250" BY WATEROUS CO OR "SUPER CENTURION 250" BY MUELLER CO. OPENING TO THE LEFT. REFER TO TCR STANDARD DETAIL W-11.
7. ALL WATER LINES SHALL BE BURIED AN ABSOLUTE MINIMUM OF 5 FEET FROM FINAL GRADE TO THE TOP OF THE WATER MAIN. THE MAXIMUM BURY DEPTH SHALL BE 6 FEET UNLESS ADDITIONAL DEPTH IS REQUIRED FOR UTILITY CROSSINGS OR OTHER CONFLICTS. WHEREVER SUCH CROSSINGS OR CONFLICTS OCCUR, THE TCR STANDARD DETAIL W17 SHALL BE USED.
8. ALL WATER LINES SHALL BE BEDDED IN ACCORDANCE WITH TCR STANDARD DETAIL W-21.
9. CONTRACTOR SHALL MAINTAIN 18-INCH VERTICAL CLEARANCE AND 10-FOOT HORIZONTAL CLEARANCE EDGE-TO-EDGE BETWEEN ALL WATER LINES AND ANY OTHER PIPED UTILITIES.
10. ALL BENDS, TEES, FIRE HYDRANTS AND PLUGS AT DEAD-END MAINS SHALL BE RESTRAINED FROM THRUST BY USING MEGALUG RESTRAINTS PER TCR STANDARD DETAIL W-18 IN COMBINATION WITH CONCRETE THRUST BLOCKS PER TCR STANDARD DETAIL W-22.
11. CONTRACTOR SHALL BE RESPONSIBLE FOR ADJUSTING ALL FIRE HYDRANTS AND VALVE BOXES TO FINISH GRADE IN ACCORDANCE WITH TCR STANDARD DETAILS W-10 AND W-11.

SQF, LLC

16 MIDDLE ST, 4TH FLOOR
PORTLAND, ME 04101

PUBLIC WORKS CONSTRUCTION DOCUMENT

TOWN PROJECT NUMBER:
CD25-0059

PLANS PREPARED BY:

Kimley»Horn

6200 S SYRACUSE WAY. #300
GREENWOOD VILLAGE, CO 80111
PHONE (303) 228-2300
WWW.KIMLEY-HORN.COM

REV.	DATE	DESCRIPTION	BY
3	09/25/26	REVISED: POLE HEIGHT	WSG
2	12/16/25	REVISED:CITY COMMENTS	JAC
1	11/20/25	REVISED: CITY COMMENTS	WBB
0	09/02/25	100% FINAL CDs	SJB

DRAWN BY:	CHECKED BY:
SJB	XMJ

KHA PROJECT NUMBER:
296015001

TOWN APPROVAL BLOCK

TOWN OF CASTLE ROCK APPROVAL PLANS ARE HEREBY APPROVED FOR ONE YEAR FROM DATE OF DEVELOPMENT SERVICES APPROVAL

APPROVED BY:

DEVELOPMENT SERVICES

DATE

FOR REVIEW

PROJECT INFORMATION:

NODE NAME: DN2020BA_31LAB (DN1462)

1991 FOOTHILLS DR
CASTLE ROCK, CO 80109
DOUGLAS COUNTY

SHEET TITLE:

T.o.C.R.
STANDARD NOTES I

SHEET NUMBER:

N-1 (2 OF 16)

12. PRIOR TO CONNECTING TO THE TOWNS EXISTING WATER SYSTEM, ALL NEW WATER LINES AND/OR SEGMENTS OF WATERLINES SHALL BE DISINFECTED, PRESSURE TESTED, AND BACTERIOLOGICALLY TESTED IN ACCORDANCE WITH SECTION 450.5 OF TOWN OF CASTLE ROCK CONSTRUCTION METHODOLOGY AND MATERIALS MANUAL; AWWA C651-14 AND C600-5.2 AND DETAILS W-35A AND/OR W35B. PLEASE NOTE THAT THE DISINFECTION AND TESTING WILL BE PERFORMED WHILE THE NEW WATERLINES AND/OR SEGMENTS OF WATERLINES ARE NOT PHYSICALLY CONNECTED TO THE TOWNS EXISTING WATER SYSTEM. TOWN AND CONTRACTOR SHALL FURNISH MATERIALS AS SHOWN ON DETAILS W-35A AND/OR W-35B. CONTRACTOR SHALL PERFORM ALL PROCEDURES FOR TESTING, FLUSHING AND DISINFECTING OF ALL WATER LINES. TESTING SHALL BE DONE IN THE PRESENCE OF THE TCR CONSTRUCTION INSPECTOR. CONTRACTOR SHALL PROVIDE A MINIMUM SEVENTY-TWO (72) HOURS NOTICE TO, AND OBTAIN APPROVAL FROM THE ON-SITE TCR CONSTRUCTION INSPECTOR, (720)733-2200, PRIOR TO DISINFECTION, PRESSURE TESTING AND BATERIOLOGICAL TESTING OF ANY NEW WATERLINES AND/OR SEGMENTS OF WATERLINES.
13. DISTANCES FOR WATER LINES ARE HORIZONTAL DISTANCE FROM THE CENTER OF THE FITTING TO THE CENTER OF THE FITTING. THEREFORE, DISTANCES SHOWN ON THE PLANS ARE APPROXIMATE AND COULD VARY DUE TO VERTICAL ALIGNMENT AND FITTING DIMENSIONS.
14. ALL DOMESTIC WATER SERVICE LINES SHALL BE TYPE K COPPER INSULATED WITH POLYWRAP, FROM THE MAIN TO THE METER. THE WATER METER SHALL BE SUPPLIED BY THE TOWN AND INSTALLED BY THE CONTRACTOR. THE WATER METER WILL BE AVAILABLE FOR PICK UP AT CASTLE ROCK WATER. THE INDIVIDUAL PICKING UP THE WATER METER MUST HAVE PROOF OF A PERMIT AND MUST HAVE PAID ALL FEES ASSOCIATED WITH THE WATER METER.
15. WATER LINE TRENCHES SHALL BE SLOPED OR BRACED AND SHEETED AS NECESSARY FOR THE SAFETY OF THE WORKERS AND THE PROTECTION OF OTHER UTILITIES, IN COMPLIANCE WITH ALL APPLICABLE STATE AND FEDERAL REQUIREMENTS. FOR ALL EXCAVATION OPERATIONS, SAFETY IS THE RESPONSIBILITY OF THE CONTRACTOR.
16. WATER LINES SHALL BE ALIGNED 6 FEET OFF THE NORTH AND EAST GUTTER FLOW LINES OF PUBLIC STREETS WHEREVER POSSIBLE. SEE DETAIL W-13.
17. WHERE WATER LINE IMPROVEMENTS ARE DIFFICULT TO LOCATE ON THE SURFACE, THE CONTRACTOR SHALL BE REQUIRED TO INSTALL PERMANENT WATER LINE MARKERS, IN ACCORDANCE WITH THE TCR STANDARD DETAIL W-23 OR AT THE DISCRETION OF TCR CONSTRUCTION INSPECTOR.
18. TRACER WIRE SHALL BE USED ON ALL DIP AND PVC WATER MAINS AND WARNING TAPE SHALL BE PLACED 1 FOOT ABOVE ALL DIP AND PVC PIPE. REFER TO TOWN OF CASTLE ROCK STANDARD TRACER WIRE REQUIREMENTS IN THESE GENERAL NOTES. TEST STATIONS SHALL BE CONSTRUCTED PER STANDARD DETAIL W-28.
19. THE MINIMUM DISTANCE BETWEEN TEES, CROSSES, VALVES AND BENDS SHALL BE 10 FEET WHEREVER POSSIBLE.
20. MAXIMUM DEFLECTION FOR WATER MAINS SHALL NOT EXCEED ONE-HALF OF THE MANUFACTURERS MAXIMUM ALLOWABLE DEFLECTION OR 2.5 DEGREES, WHICHEVER IS LESS.
21. ALL RESIDENTIAL WATER SERVICE LINES SHALL BE CONSTRUCTED PERPENDICULAR TO THE FRONT PROPERTY LINE IN CONFORMANCE WITH THE TOWN OF CASTLE ROCK WATER SYSTEM DESIGN CRITERIA MANUAL AND WATER DETAILS.
22. THE MAIXIMUM DEFLECTION OF DOMESTIC WATER SERVICE LINES AND IRRIGATION LINES SHALL NOT EXCEED THE MANUFACTURER'S MAXIMUM ALLOWABLE DEFLECTION.
23. THE SIZE OF THE IRRIGATION TAP, LINE, METER AND BACKFLOW PREVENTION ASSEMBLY SHALL BE THE SAME TO A MINIMUM DISTANCE OF 10 PIPE DIAMETERS PAST THE WINTERIZATION TEE.
24. THE MINIMUM HORIZONTAL SEPARATION BETWEEN UTILITY LINES CARRYING THE SAME MATERIAL (E.G. WATER AND WATER) SHALL BE 5 FEET.
25. WHEN INSTALLING CUT IN TEES OR OTHER APPURTENANCES ON/IN AN EXISTING WATER LINE, THE PIPE MATERIAL BETWEEN THE EXISTING WATER LINE AND THE CUT IN TEE OR OTHER APPURTENANCE SHALL REMAIN CONSISTENT.
26. CONTRACTOR IS RESPONSIBLE TO PROVIDE BACKFLOW PREVENTION DOWNSTREAM OF THE METER. ACCEPTABLE BACKFLOW PREVENTION ASSEMBLIES ARE AS FOLLOWS:
    - COMMERCIAL POTABLE WATER SERVICE: REDUCED PRESSURE ASSEMBLY
    - RESIDENTIAL POTABLE WATER SERVICE: DOUBLE CHECK VALVE ASSEMBLY, REDUCED PRESSURE ASSEMBLY
    - COMMERCIAL FIRE SERVICE: REDUCED PRESSURE DETECTOR ASSEMBLY, DOUBLE CHECK VALVE DETECTOR ASSEMBLY
    - RESIDENTIAL FIRE SERVICE: REDUCED PRESSURE DETECTOR ASSEMBLY, DOUBLE CHECK VALVE DETECTOR ASSEMBLY
    - COMMERCIAL AND MULTIFAMILY IRRIGATION WATER SERVICE: REDUCED PRESSURE ASSEMBLY

    THE DOUBLE CHECK DETECTOR ASSEMBLY (DCDA) IS THE ONLY BACK FLOW PREVENTION DEVICE RATED FOR HORIZONTAL OR VERTICAL INSTALLATION.

STORM DRAINAGE CONSTRUCTION NOTES:

1. ALL STORM DRAINAGE CONSTRUCTION IS SUBJECT TO THE GENERAL NOTES ON THE COVER SHEET OF THESE PLANS AS WELL AS THE STORM DRAINAGE CONSTRUCTION NOTES LISTED HERE.
2. ALL STORM DRAINAGE PIPES SHALL BE REINFORCED CONCRETE PIPE (RCP) PER ASTM C76, CL III INSTALLED WITH FLEXIBLE PLASTIC (BITUMEN) GASKETS, ACCORDING TO THE MANUFACTURER'S INSTALLATION GUIDELINES. ANY STORM DRAINAGE PIPE UNDER A PROPOSED OR FUTURE TRAFFIC AREA SHALL BE RCP CL III AS A MINIMUM. RCP TO BE JACKED SHALL BE CL-V AS A MINIMUM.
3. ALL STORM DRAINAGE PIPES SHALL HAVE A MINIMUM COVER OF 24" UNLESS LOAD CALCULATIONS ARE PROVIDED. UNDER NO CIRCUMSTANCES WILL ANY PIPE HAVE LESS THAN 18" COVER FROM THE FINISH SURFACE TO THE OUTSIDE WALL PIPE.
4. ALL STORM DRAINAGE PIPES SHALL BE BEDDED IN ACCORDANCE WITH TCR STANDARD DETAIL SD-2.
5. ALL STORM DRAINAGE TRENCHES SHALL BE SLOPED OR BRACED AND SHEETED AS NECESSARY FOR THE SAFETY OF THE WORKERS AND THE PROTECTION OF OTHER UTILITIES AND IN COMPLIANCE WITH ALL APPLICABLE STATE AND FEDERAL REQUIREMENTS, ALL EXCAVATION OPERATION SAFETY IS THE RESPONSIBILITY OF THE CONTRACTOR.
6. ALL MANHOLE RIM ELEVATIONS GIVEN ON THESE PLANS ARE TO BE CONSIDERED APPROXIMATE. THE CONTRACTOR SHALL SET THE FINAL RIM ELEVATION BASESD ON THE COMPLETED FINISH SURFACE.
7. ALL STORM DRAINAGE PIPES SHALL HAVE A MINIMUM HORIZONTAL SEPARATION OF 10' FROM ALL WATER LINES. WHERE LINES CROSS, THERE SHALL BE A MINIMUM OF 18" CLEAR VERTICAL SEPARATION.
8. ALL INLETS AND MANHOLES SHALL BE PLACED ON A MINIMUM OF 1' OF 3/4" WASH ROCK. IF ADDITIONAL SUBGRADE IS DISTURBED, EXCAVATION SHALL BE BACKFILLED WITH 3/4" WASH ROCK OR OTHER APPROVED STRUCTURAL SOIL COMPACTED TO 95% OF ASTM D698 UNLESS OTHERWISE INSTRUCTED BY THE INSPECTOR.

SANITARY SEWER CONSTRUCTION NOTES:

1. ALL SANITARY SEWER CONSTRUCTION IS SUBJECT TO THE GENERAL NOTES ON THE COVER SHEET OF THESE PLANS AS WELL AS THE SANITARY SEWER CONSTRUCTION NOTES LISTED HEREIN.
2. ALL SANITARY SEWER PIPELINES SHALL BE PVC, SDR-35, IN ACCORDANCE WITH ASTM D-3034, BELL AND SPIGOT WITH ELASTOMERIC SEAL.
3. ALL SANITARY SEWER PIPELINES SHALL HAVE A MINIMUM COVER OF 5 FEET AND MAXIMUM COVER OF 20 FEET.
4. ALL SANITARY SEWER PIPELINES SHALL BE BEDDED IN ACCORDANCE WITH THE TCR STANDARD DETAIL SS-8.
5. ALL MANHOLE RIM ELEVATIONS GIVEN ON THESE PLANS ARE CONSIDERED APPROXIMATE. THE CONTRACTOR SHALL SET THE FINAL RIM ELEVATION BASED ON THE COMPLETE FINISH SURFACE AND PER TCR STANDARD DETAIL SS-3.
6. SANITARY SEWER PIPELINE SHALL BE ALIGNED 6 FEET OFF THE SOUTH AND WEST GUTTER FLOW LINES OF PUBLIC STREETS WHEREVER POSSIBLE.
7. ALL SEWER LINES SHALL HAVE A MINIMUM HORIZONTAL SEPARATION OF 10 FEET EDGE TO EDGE FROM ALL WATER LINES. WHERE LINES CROSS THERE SHALL BE A MINIMUM OF 18" CLEAR VERTICAL SEPARATION.
8. ALL SANITARY SEWER LINES MUST BE TESTED IN ACCORDANCE WITH SECTION 450.6 OF THE TOWN OF CASTLE ROCK CONSTRUCTION METHODOLOGY AND MATERIALS MANUAL IN THE PRESENCE OF A TCR CONSTRUCTION INSPECTOR.
9. ALL SANITARY SEWER LINE TRENCHES SHALL BE SLOPED OR BRACED AND SHEETED AS NECESSARY FOR THE SAFETY OF THE WORKERS AND THE PROTECTION OF OTHER UTILITIES IN COMPLIANCE WITH ALL APPLICABLE STATE AND FEDERAL REQUIREMENTS. ALL EXCAVATION OPERATION SAFETY IS THE RESPONSIBILITY OF THE CONTRACTOR.
10. SANITARY SEWER SERVICES SHALL BE CONNECTED A MINIMUM OF 5 FEET OUTSIDE OF MANHOLES WITH A WYE CONNECTION IN ACCORDANCE WITH TCR STANDARD DETAIL SS-2.
11. MINIMUM COVER FOR SANITARY SEWER SERVICE SHALL BE 5 FEET AND THE MINIMUM SLOPE SHALL BE 2.0%.
12. ALL SANITARY SEWER SERVICE LINES SHALL BE CONSTRUCTED ALONG THE SHORTEST AND STRAIGHTES ROUTE POSSIBLE IN CONFORMANCE WITH THE TOWN OF CASTLE ROCK WASTEWATER SYSTEM DESIGN CRITERIA MANUAL.
13. THE MINIMUM HORIZONTAL SEPARATION BETWEEN UTILITY LINES CARRYING THE SAME MATERIAL (E.G. WASTEWATER AND WASTEWATER) SHALL BE 5 FEET.
14. THE PLUM CREEK WASTEWATER AUTHORITY MUST APPROVE OIL AND GREASE INTERCEPTORS FOR COMMERCIAL INSTALLATIONS.
15. ALL MANHOLES SHALL BE PLACED ON A MINIMUM OF 1' OF 3/4" WASH ROCK. IF ADDITIONAL SUBGRADE IS DISTURBED, EXCAVATION SHALL BE BACKFILLED WITH 3/4" WASH ROCK OR OTHER APPROVED STRUCTURAL SOIL COMPACTED TO 95% OF ASTM D698 UNLESS OTHERWISE INSTRUCTED BY THE INSPECTOR.

LANDSCAPE NOTES:

1. NON-IRRIGATED NATIVE SEED AREAS SHALL BE INSTALLED USING THE TOWN OF CASTLE ROCK GRADING EROSION AND SEDIMENT CONTROL MANUAL (GESC) STANDARD DETAIL #17.
2. NO TURF AND/OR OVERHEAD IRRIGATION ON SLOPES 3:1
3. NO SLOPES GREATER THAN 3:1 ARE PERMITTED.
4. TOP SOIL, IF DISTURBED SHALL BE STOCK PILED AND REUSED ON THE SITE.
5. NO MORE THAN SIXTY PERCENT OF THE TOTAL COMMERCIAL LANDSCAPE AREA SHALL INCLUDE IRRIGATED TURF GRASS.
6. NO INDIVIDUAL PLANT MAY HAVE SUPPLEMENTAL WATER DEMAND GREATER THAN 15" PER GROWING SEASON.

IRRIGATION NOTES:

1. THE IRRIGATION SYSTEM SHALL BE EQUIPPED WITH A BACKFLOW PREVENTION ASSEMBLY APPROVED BY THE TOWN OF CASTLE ROCK.
2. IRRIGATION TAP, LINE, METER AND BACKFLOW PREVENTION ASSEMBLY MUST BE THE SAME SIZE FROM THE TAP TO THE MINIMUM DISTANCE OF 10 PIPE DIAMETERS PAST THE BACKFLOW PREVENTION ASSEMBLY AND WINTERIZATION TEE.
3. WATER WASTE IS NOT ALLOWED PER THE TOWN OF CASTLE ROCK'S WATER USE MANAGEMENT PLAN. THEREFORE, ALL NOZZLES ARE TO BE FINE TUNE/ADJUSTED SO THAT OVERSPRAY ONTO HARD SURFACES IS ELIMINATED.
4. IRRIGATION IS NOT PERMITTED ON 3:1 SLOPES.
5. VELOCITY SHALL NOT EXCEED 7.5 FPS THROUGH THE WATER METER.
6. NO OVERHEAD IRRIGATION IN AREAS LESS THAN 10 FEET WIDE.
7. THERE IS TO BE NEITHER PLAN MATERIAL NOR IRRIGATION IN AREAS LESS THAN 4 FEET WIDE.

SQF, LLC

16 MIDDLE ST, 4TH FLOOR
PORTLAND, ME 04101

PUBLIC WORKS CONSTRUCTION DOCUMENT

TOWN PROJECT NUMBER:
CD25-0059

PLANS PREPARED BY:

Kimley»Horn

6200 S SYRACUSE WAY. #300
GREENWOOD VILLAGE, CO 80111
PHONE (303) 228-2300
WWW.KIMLEY-HORN.COM

REV.	DATE	DESCRIPTION	BY
3	09/25/26	REVISED: POLE HEIGHT	WSG
2	12/16/25	REVISED:CITY COMMENTS	JAC
1	11/20/25	REVISED: CITY COMMENTS	WBB
0	09/02/25	100% FINAL CDs	SJB

DRAWN BY:	CHECKED BY:
SJB	XMJ

KHA PROJECT NUMBER:
296015001

TOWN APPROVAL BLOCK

TOWN OF CASTLE ROCK APPROVAL PLANS ARE HEREBY APPROVED FOR ONE YEAR FROM DATE OF DEVELOPMENT SERVICES APPROVAL

APPROVED BY:

DEVELOPMENT SERVICES

DATE

FOR REVIEW

PROJECT INFORMATION:

NODE NAME: DN2020BA_31LAB (DN1462)

1991 FOOTHILLS DR
CASTLE ROCK, CO 80109
DOUGLAS COUNTY

SHEET TITLE:

T.o.C.R.
STANDARD NOTES II

SHEET NUMBER:

N-2 (3 OF 16)

GENERAL NOTES:

1. FOR THE PURPOSE OF CONSTRUCTION DRAWINGS, THE FOLLOWING DEFINITIONS SHALL APPLY:
   - GENERAL CONTRACTOR
   - CONTRACTOR: (CONSTRUCTION)
   - EQUIPMENT OWNER: SQF, LLC
   - POLE OWNER: SQF, LLC
2. ALL SITE WORK SHALL BE COMPLETED AS INDICATED ON THE DRAWINGS AND SQF, LLC PROJECT SPECIFICATIONS.
3. GENERAL CONTRACTOR SHALL VISIT THE SITE AND SHALL BE FAMILIAR WITH ALL CONDITIONS AFFECTING THE PROPOSED WORK AND SHALL MAKE PROVISIONS. GENERAL CONTRACTOR SHALL BE RESPONSIBLE FOR BEING FAMILIAR WITH ALL CONTRACT DOCUMENTS, FIELD CONDITIONS, DIMENSIONS, AND CONFIRMING THAT THE WORK MAY BE ACCOMPLISHED AS SHOWN PRIOR TO PROCEEDING WITH CONSTRUCTION. ANY DISCREPANCIES SHALL BE BROUGHT TO THE ATTENTION OF THE ENGINEER PRIOR TO THE COMMENCEMENT OF WORK.
4. ALL MATERIALS FURNISHED AND INSTALLED SHALL BE IN STRICT ACCORDANCE WITH ALL APPLICABLE CODES, REGULATIONS, AND ORDINANCES. GENERAL CONTRACTOR SHALL ISSUE ALL APPROPRIATE NOTICES AND COMPLY WITH ALL LAWS, ORDINANCES, RULES, REGULATIONS, AND LAWFUL ORDERS OF ANY PUBLIC AUTHORITY REGARDING THE PERFORMANCE OF WORK.
5. ALL WORK CARRIED OUT SHALL COMPLY WITH ALL APPLICABLE MUNICIPAL AND UTILITY COMPANY SPECIFICATIONS AND LOCAL JURISDICTIONAL CODES, ORDINANCES, AND APPLICABLE REGULATIONS.
6. UNLESS NOTED OTHERWISE, THE WORK SHALL INCLUDE FURNISHING MATERIALS, EQUIPMENT, APPURTENANCES, AND LABOR NECESSARY TO COMPLETE ALL INSTALLATIONS AS INDICATED ON THE DRAWINGS.
7. PLANS ARE NOT TO BE SCALED. THESE PLANS ARE INTENDED TO BE A DIAGRAMMATIC OUTLINE ONLY UNLESS OTHERWISE NOTED. DIMENSIONS SHOWN ARE TO FINISH SURFACES UNLESS OTHERWISE NOTED. SPACING BETWEEN EQUIPMENT IS THE MINIMUM REQUIRED CLEARANCE. THEREFORE, IT IS CRITICAL TO FIELD VERIFY DIMENSIONS, SHOULD THERE BE ANY QUESTIONS REGARDING THE CONTRACT DOCUMENTS, THE CONTRACTOR SHALL BE RESPONSIBLE FOR OBTAINING A CLARIFICATION FROM THE ENGINEER PRIOR TO PROCEEDING WITH THE WORK. DETAILS ARE INTENDED TO SHOW DESIGN INTENT. MODIFICATIONS MAY BE REQUIRED TO SUIT JOB DIMENSIONS OR CONDITIONS AND SUCH MODIFICATIONS SHALL BE INCLUDED AS PART OF WORK AND PREPARED BY THE ENGINEER PRIOR TO PROCEEDING WITH WORK.
8. THE CONTRACTOR SHALL INSTALL ALL EQUIPMENT AND MATERIALS IN ACCORDANCE WITH MANUFACTURER'S RECOMMENDATIONS UNLESS SPECIFICALLY STATED OTHERWISE.
9. IF THE SPECIFIED EQUIPMENT CANNOT BE INSTALLED AS SHOWN ON THESE DRAWINGS, THE CONTRACTOR SHALL PROPOSE AN ALTERNATIVE INSTALLATION SPACE FOR APPROVAL BY THE ENGINEER PRIOR TO PROCEEDING.
10. GENERAL CONTRACTOR SHALL BE RESPONSIBLE FOR THE SAFETY OF WORK AREA, ADJACENT AREAS AND BUILDING OCCUPANTS THAT ARE LIKELY TO BE AFFECTED BY THE WORK UNDER THIS CONTRACT. WORK SHALL CONFORM TO ALL OSHA REQUIREMENTS AND THE LOCAL JURISDICTION.
11. GENERAL CONTRACTOR SHALL COORDINATE WORK AND SCHEDULE WORK ACTIVITIES WITH OTHER DISCIPLINES.
12. ERECTION SHALL BE DONE IN A WORKMANLIKE MANNER BY COMPETENT EXPERIENCED WORKMAN IN ACCORDANCE WITH APPLICABLE CODES AND THE BEST ACCEPTED PRACTICE. ALL MEMBERS SHALL BE LAID PLUMB AND TRUE AS INDICATED ON THE DRAWINGS.
13. SEAL PENETRATIONS THROUGH FIRE RATED AREAS WITH UL LISTED MATERIALS APPROVED BY LOCAL JURISDICTION. CONTRACTOR SHALL KEEP AREA CLEAN, HAZARD FREE, AND DISPOSE OF ALL DEBRIS.
14. THE SCOPE OF WORK FOR THIS PROJECT IS REPRESENTED BY DARK SHADED LINES AND NOTES. CONTRACTOR SHALL NOTIFY THE GENERAL CONTRACTOR OF ANY EXISTING CONDITIONS THAT DEVIATE FROM THE DRAWINGS PRIOR TO BEGINNING CONSTRUCTION.
15. CONTRACTOR SHALL PROVIDE WRITTEN NOTICE TO THE CONSTRUCTION MANAGER 48 HOURS PRIOR TO COMMENCEMENT OF WORK.
16. THE CONTRACTOR SHALL PROTECT EXISTING IMPROVEMENTS, PAVEMENTS, CURBS, LANDSCAPING AND STRUCTURES. ANY DAMAGED PART SHALL BE REPAIRED AT CONTRACTOR'S EXPENSE TO THE SATISFACTION OF THE OWNER.
17. THE CONTRACTOR SHALL CONTACT UTILITY LOCATING SERVICES PRIOR TO THE START OF CONSTRUCTION.
18. GENERAL CONTRACTOR SHALL COORDINATE AND MAINTAIN ACCESS FOR ALL TRADES AND CONTRACTORS TO THE SITE AND/OR BUILDING.
19. THE GENERAL CONTRACTOR SHALL BE RESPONSIBLE FOR SECURITY OF THE SITE FOR THE DURATION OF CONSTRUCTION UNTIL JOB COMPLETION.
20. THE GENERAL CONTRACTOR SHALL MAINTAIN IN GOOD CONDITION ONE COMPLETE SET OF PLANS WITH ALL REVISIONS, ADDENDA, AND CHANGE ORDERS ON THE PREMISES AT ALL TIMES.
21. THE GENERAL CONTRACTOR SHALL PROVIDE PORTABLE FIRE EXTINGUISHERS WITH A RATING OF NOT LESS THAN 2-A OT 2-A:10-B:C AND SHALL BE WITHIN 25 FEET OF TRAVEL DISTANCE TO ALL PORTIONS OF WHERE THE WORK IS BEING COMPLETED DURING CONSTRUCTION.
22. ALL EXISTING ACTIVE SEWER, WATER, GAS, ELECTRIC, AND OTHER UTILITIES SHALL BE PROTECTED AT ALL TIMES, AND WHERE REQUIRED FOR THE PROPER EXECUTION OF THE WORK, SHALL BE RELOCATED AS DIRECTED BY THE ENGINEER. EXTREME CAUTION SHOULD BE USED BY THE CONTRACTOR WHEN EXCAVATING OR DRILLING PIERS AROUND OR NEAR UTILITIES. CONTRACTOR SHALL PROVIDE SAFETY TRAINING FOR THE WORKING CREW. THIS SHALL INCLUDE BUT NOT BE LIMITED TO A) FALL PROTECTION, B) CONFINED SPACE, C) ELECTRICAL SAFETY, AND D) TRENCHING & EXCAVATION.
23. ALL EXISTING INACTIVE SEWER, WATER, GAS, ELECTRIC, AND OTHER UTILITIES, WHICH INTERFERE WITH THE EXECUTION OF THE WORK, SHALL BE REMOVED, CAPPED, PLUGGED OR OTHERWISE DISCONNECTED AT POINTS WHICH WILL NOT INTERFERE WITH THE EXECUTION OF THE WORK, AS DIRECTED BY THE RESPONSIBLE ENGINEER, AND SUBJECT TO THE APPROVAL OF THE OWNER AND/OR LOCAL UTILITIES.
24. THE AREAS OF THE OWNER'S PROPERTY DISTURBED BY THE WORK AND NOT COVERED BY THE TOWER, EQUIPMENT OR DRIVEWAY, SHALL BE GRADED TO A UNIFORM SLOPE, AND STABILIZED TO PREVENT EROSION.
25. CONTRACTOR SHALL MINIMIZE DISTURBANCE TO THE EXISTING SITE DURING CONSTRUCTION. EROSION CONTROL MEASURES, IF REQUIRED DURING CONSTRUCTION, SHALL BE IN CONFORMANCE WITH THE FEDERAL AND LOCAL JURISDICTION FOR EROSION AND SEDIMENT CONTROL.
26. NO FILL OR EMBANKMENT MATERIAL SHALL BE PLACED ON FROZEN GROUNDING. FROZEN MATERIALS, SNOW OR ICE SHALL NOT BE PLACED IN ANY FILL OR EMBANKMENT.
27. THE SUBGRADE SHALL BE BROUGHT TO A SMOOTH UNIFORM GRADE AND COMPACTED TO 95 PERCENT STANDARD PROCTOR DENSITY UNDER PAVEMENT AND STRUCTURES AND 80 PERCENT STANDARD PROCTOR DENSITY IN OPEN SPACE. ALL TRENCHES IN PUBLIC RIGHT OF WAY SHALL BE BACKFILLED WITH FLOWABLE FILL OR OTHER MATERIAL PRE-APPROVED BY THE LOCAL JURISDICTION.
28. ALL NECESSARY RUBBISH, STUMPS, DEBRIS, STICKS, STONES, AND OTHER REFUSE SHALL BE REMOVED FROM THE SITE AND DISPOSED OF IN A LAWFUL MANNER.
29. ALL BROCHURES, OPERATING AND MAINTENANCE MANUALS, CATALOGS, SHOP DRAWINGS, AND OTHER DOCUMENTS SHALL BE TURNED OVER TO THE GENERAL CONTRACTOR AT COMPLETION OF CONSTRUCTION.
30. CONTRACTOR SHALL LEAVE PREMISES IN A CLEAN CONDITION.
31. STRUCTURE IS LIMITED TO PERIODIC MAINTENANCE AND INSPECTION, APPROXIMATELY 2 TIMES PER MONTH, BY TECHNICIANS.
32. NO OUTDOOR STORAGE OR SOLID WASTE CONTAINERS ARE PROPOSED.
33. CONTRACTORS SHALL BE RESPONSIBLE FOR OBTAINING ALL PERMITS AND INSPECTIONS REQUIRED FOR CONSTRUCTION. IF CONTRACTOR CANNOT OBTAIN A PERMIT, THEY MUST NOTIFY THE CONSTRUCTION MANAGER IMMEDIATELY.
34. CONTRACTOR SHALL REMOVE ALL TRASH AND DEBRIS FROM THE SITE ON A DAILY BASIS.
35. INFORMATION SHOWN ON THESE DRAWINGS WAS OBTAINED FROM SITE VISITS AND/OR DRAWINGS PROVIDED BY THE SITE OWNER. CONTRACTORS SHALL NOTIFY THE ENGINEER OF ANY DISCREPANCIES PRIOR TO ORDERING MATERIAL OR PROCEEDING WITH CONSTRUCTION.
36. ALL CABLE INSTALLATIONS TO FOLLOW MANUFACTURER'S INSTRUCTIONS AND RECOMMENDATIONS.
37. THE NEW SMALL CELL IS UNMANNED AND NOT FOR HUMAN HABITAT. (HANDICAP ACCESS IS NOT REQUIRED).
38. OCCUPANCY IS LIMITED TO PERIODIC MAINTENANCE AND INSPECTION. APPROXIMATELY 2 TIMES PER MONTH.
39. INSTALL ALL EQUIPMENT AND MATERIALS PER MANUFACTURERS RECOMMENDATIONS UNLESS SPECIFICALLY OTHERWISE INDICATED. OR WHERE CODES OR REGULATIONS TAKE PRECEDENCE.
40. ELECTRICAL SYSTEMS SHALL BE INSTALLED IN ACCORDANCE WITH ALL APPLICABLE CODES.
41. ALL EQUIPMENT, SPECIFICATIONS, PERFORMANCE, INSTALLATION AND THE FINAL LOCATION ARE TO BE APPROVED BY CONSTRUCTION MANAGER. THE CONTRACTOR SHALL BE RESPONSIBLE FOR COORDINATING ALL WORK AND CLEARANCE REQUIRED BY OTHERS RELATED TO SAID EQUIPMENT.
42. ALL WORK PERFORMED AND MATERIALS SHALL MEET THE HIGHEST TRADE STANDARDS. CONFORM WITH ALL APPLICABLE CODES, REGULATIONS AND ORDINANCES AND COMPLY WITH ALL LAWS, ORDINANCES, RULES,REGULATIONS AND LAWFUL ORDERS OF GOVERNING AUTHORITY BEARING ON THE PERFORMANCE OF THE WORK.
43. THE GENERAL CONTRACTOR IS RESPONSIBLE FOR REDLINING THE CONSTRUCTION PLANS TO ILLUSTRATE THE AS-BUILT CONDITION OF THE SITE. THIS WILL BE DONE AFTER THE SITE HAS BEEN AWARDED THE FINAL INSPECTION. TWO COPIES OF REDLINED DRAWINGS WILL BE PROVIDED TO CONSTRUCTION MANAGER.
44. PHOTOS SHALL BE TAKEN OF THE SITE AT THE REQUEST OF THE CONSTRUCTION MANAGER. ALL WORK TO BE BURIED OR HIDDEN MUST BE PHOTO GRAPHED AND INSPECTED BY THE CONSTRUCTION MANAGER PRIOR TO BACKFILLING ETC. UNLESS OTHERWISE SPECIFIED BY CONSTRUCTION MANAGER.
45. ALL WORK IS BEING PERFORMED IN VARIOUS RIGHT-OF-WAY AND PROPERTY LOCATIONS. VERIFY ALL EQUIPMENT LOCATION/INSTALLATIONS WITH SURVEYED DATA. CONTRACTOR SHALL COORDINATE WITH OWNER'S REPRESENTATIVE FOR PROPER STORAGE LOCATIONS FOR MATERIALS.
46. ALL WORK FOR CONSTRUCTION SHALL TAKE PLACE BETWEEN THE HOURS OF 7 AM. TO 9 P.M., MONDAY THROUGH FRIDAY AND 8 A.M. TO 5 P.M. ON SATURDAYS. IF THERE IS AN ANTICIPATED NEED TO WORK OUTSIDE OF THE EXEMPTED HOURS FOR CONSTRUCTION. CONTRACTOR WILL NEED TO MAKE A REQUEST FOR NIGHTTIME NOISE VARIANCE AS ALLOWED BY THE CITY.

ABBREVIATIONS LIST:

CITY - LOCAL JURISDICTION FOR SITE, SEE T-1
CRZ - CRITICAL ROOT ZONE
FCC - FEDERAL COMMUNICATIONS COMMISSION
NEC - NATIONAL ELECTRIC CODE
POC - POINT OF CONNECTION
RF - RADIO FREQUENCY
ROW - RIGHT OF WAY
EOP - EDGE OF PAVEMENT
TIA - TELECOMMUNICATION INDUSTRY ASSOCIATION
A - AMPS
V - VOLTS
PVC - POLYVINYL CHLORIDE
HDPE - HIGH DENSITY POLYETHYLENE
THHN - THERMOPLASTIC HIGH HEAT- RESISTANT NYLON-COATED
AWG - AMERICAN WIRE GAUGE
CU - COPPER
SOP - STANDARD OPERATING PROCEDURE

COAXIAL CABLE NOTES:

1. TYPES AND SIZES OF THE ANTENNA CABLE ARE BASED ON ESTIMATED LENGTHS. PRIOR TO ORDERING CABLE, CONTRACTOR SHALL VERIFY ACTUAL LENGTH BASED ON CONSTRUCTION LAYOUT AND NOTIFY THE PROJECT MANAGER IF ACTUAL LENGTHS EXCEED ESTIMATED LENGTHS.
2. TYPES AND SIZES OF THE ANTENNA CABLE ARE BASED ON ESTIMATED LENGTHS. PRIOR TO ORDERING CABLE, CONTRACTOR SHALL VERIFY ACTUAL LENGTH BASED ON CONSTRUCTION LAYOUT AND NOTIFY THE PROJECT MANAGER IF ACTUAL LENGTHS EXCEED ESTIMATED LENGTHS.
3. CONTRACTOR SHALL VERIFY THE DOWN-TILT OF EACH ANTENNA WITH A DIGITAL LEVEL.
4. ALL COAXIAL CABLE SHALL BE SECURED TO THE DESIGNED SUPPORT STRUCTURE, IN AN APPROVED MANNER, AT DISTANCES NOT TO EXCEED 4'-0" OC.
5. CONTRACTOR SHALL FOLLOW ALL MANUFACTURER'S RECOMMENDATIONS REGARDING BOTH THE INSTALLATION AND GROUNDING OF ALL COAXIAL CABLES, CONNECTORS, ANTENNAS, AND ALL OTHER EQUIPMENT.
6. CONTRACTOR SHALL WEATHERPROOF ALL ANTENNA CONNECTORS WITH SELF AMALGAMATING TAPE.

GENERAL CABLE & EQUIPMENT NOTES:

1. CONTRACTOR SHALL BE RESPONSIBLE TO VERIFY ANTENNA, TMAS, DIPLEXERS, AND COAX CONFIGURATION, MAKE AND MODELS PRIOR TO INSTALLATION.
2. ALL CONNECTIONS FOR HANGERS, SUPPORTS, BRACING, ETC. SHALL BE INSTALLED PER MANUFACTURER'S RECOMMENDATIONS.
3. CONTRACTOR SHALL REFERENCE THE STRUCTURAL ANALYSIS / DESIGN DRAWINGS FOR DIRECTIONS ON CABLE DISTRIBUTION / ROUTING.
4. ALL OUTDOOR RF CONNECTORS/CONNECTIONS SHALL BE WEATHERPROOFED, EXCEPT THE RET CONNECTORS, USING BUTYL TAPE AFTER INSTALLATION AND FINAL CONNECTIONS ARE MADE. BUTYL TAPE SHALL HAVE A MINIMUM OF ONE-HALF TAPE WIDTH OVERLAP ON EACH TURN AND EACH LAYER SHALL BE WRAPPED THREE TIMES. WEATHERPROOFING SHALL BE SMOOTH WITHOUT BUCKLING. BUTYL BLEEDING IS NOT ALLOWED.
5. IF REQUIRED TO PAINT ANTENNAS AND/OR COAX:
   - A. TEMPERATURE SHALL BE ABOVE 50° F.
   - B. PAINT COLOR MUST BE APPROVED BY BUILDING OWNER/LANDLORD.
   - C. FOR REGULATED TOWERS, FAA/FCC APPROVED PAINT IS REQUIRED.
   - D. DO NOT PAINT OVER COLOR CODING OR ON EQUIPMENT MODEL NUMBERS.
6. ALL PROPOSED GROUND BAR DOWNLEADS ARE TO BE TERMINATED TO THE EXISTING ADJACENT GROUND BAR DOWNLEADS A MINIMUM DISTANCE OF 4'-0" BELOW GROUND BAR. TERMINATIONS MAY BE EXOTHERMIC OR COMPRESSION.
7. ALL CONNECTIONS FOR HANGERS, SUPPORTS, BRACING, ETC. SHALL BE INSTALLED PER MANUFACTURER'S SPECIFICATION & RECOMMENDATIONS.

RF CONNECTOR REQUIREMENTS:

1. ALL RF CONNECTIONS SHALL BE TIGHTENED BY A TORQUE WRENCH.
2. ALL RF CONNECTIONS, GROUNDING HARDWARE AND ANTENNA HARDWARE SHALL HAVE A TORQUE MARK INSTALLED IN A CONTINUOUS STRAIGHT LINE FROM BOTH SIDES OF THE CONNECTION.
   - A. RF CONNECTION BOTH SIDES OF THE CONNECTOR.
   - B. GROUNDING AND ANTENNA HARDWARE ON THE NUT SIDE STARTING FROM THE THREADS TO THE SOLID SURFACE. EXAMPLE OF SOLID SURFACE: GROUND BAR, ANTENNA BRACKET METAL.
3. ALL 8M ANTENNA HARDWARE SHALL BE TIGHTENED TO 9 LB-FT (12 NM).
4. ALL 12M ANTENNA HARDWARE SHALL BE TIGHTENED TO 43 LB-FT (58 NM).
5. ALL GROUNDING HARDWARE SHALL BE TIGHTENED UNTIL THE LOCK WASHER COLLAPSES AND THE GROUNDING HARDWARE IS NO LONGER LOOSE.
6. ALL DIN TYPE CONNECTIONS SHALL BE TIGHTENED TO 18-22 LB-FT (24.4 - 29.8 NM).
7. ALL N TYPE CONNECTIONS SHALL BE TIGHTENED TO 15-20 LB-IN (1.7 - 2.3 NM)

STRUCTURAL STEEL NOTES:

1. DESIGN AND CONSTRUCTION OF ANTENNA SUPPORTS SHALL CONFORM TO CURRENT ANSI/TIA-222-H OR APPLICABLE LOCAL CODES.
2. ALL STEEL MATERIALS SHALL BE GALVANIZED AFTER FABRICATION IN ACCORDANCE WITH ASTM A123 "ZINC (HOT-DIP GALVANIZED) COATINGS ON IRON AND STEEL PRODUCTS", UNLESS NOTED OTHERWISE.
3. ALL BOLTS, ANCHORS AND MISCELLANEOUS HARDWARE SHALL BE GALVANIZED IN ACCORDANCE WITH ASTM A153 "ZINC-COATING (HOT-DIP) ON IRON AND STEEL HARDWARE", UNLESS NOTED OTHERWISE.
4. DAMAGED GALVANIZED SURFACES SHALL BE REPAIRED BY COLD GALVANIZING IN ACCORDANCE WITH ASTM A780.
5. ALL ANTENNA MOUNTS SHALL BE INSTALLED WITH LOCK NUTS, DOUBLE NUTS AND SHALL BE TORQUED TO MANUFACTURER'S RECOMMENDATIONS.
6. CONTRACTOR SHALL INSTALL ANTENNA PER MANUFACTURER'S RECOMMENDATION FOR INSTALLATION AND GROUNDING.
7. PRIOR TO SETTING ANTENNA AZIMUTHS AND DOWNTILTS, ANTENNA CONTRACTOR SHALL CHECK THE ANTENNA MOUNT FOR TIGHTNESS AND ENSURE THAT THEY ARE PLUMB, ANTENNA AZIMUTHS SHALL BE SET FROM TRUE NORTH.

SQF, LLC

16 MIDDLE ST, 4TH FLOOR
PORTLAND, ME 04101

PUBLIC WORKS CONSTRUCTION DOCUMENT

TOWN PROJECT NUMBER:
CD25-0059

PLANS PREPARED BY:

Kimley»Horn

6200 S SYRACUSE WAY. #300
GREENWOOD VILLAGE, CO 80111
PHONE (303) 228-2300
WWW.KIMLEY-HORN.COM

REV.	DATE	DESCRIPTION	BY
3	09/25/26	REVISED: POLE HEIGHT	WSG
2	12/16/25	REVISED:CITY COMMENTS	JAC
1	11/20/25	REVISED: CITY COMMENTS	WBB
0	09/02/25	100% FINAL CDs	SJB

DRAWN BY:	CHECKED BY:
SJB	XMJ

KHA PROJECT NUMBER:
296015001

TOWN APPROVAL BLOCK

TOWN OF CASTLE ROCK APPROVAL PLANS ARE HEREBY APPROVED FOR ONE YEAR FROM DATE OF DEVELOPMENT SERVICES APPROVAL

APPROVED BY:

DEVELOPMENT SERVICES

DATE

FOR REVIEW

PROJECT INFORMATION:

NODE NAME: DN2020BA_31LAB (DN1462)

1991 FOOTHILLS DR
CASTLE ROCK, CO 80109
DOUGLAS COUNTY

SHEET TITLE:

GENERAL NOTES

SHEET NUMBER:

N-3 (4 OF 16)

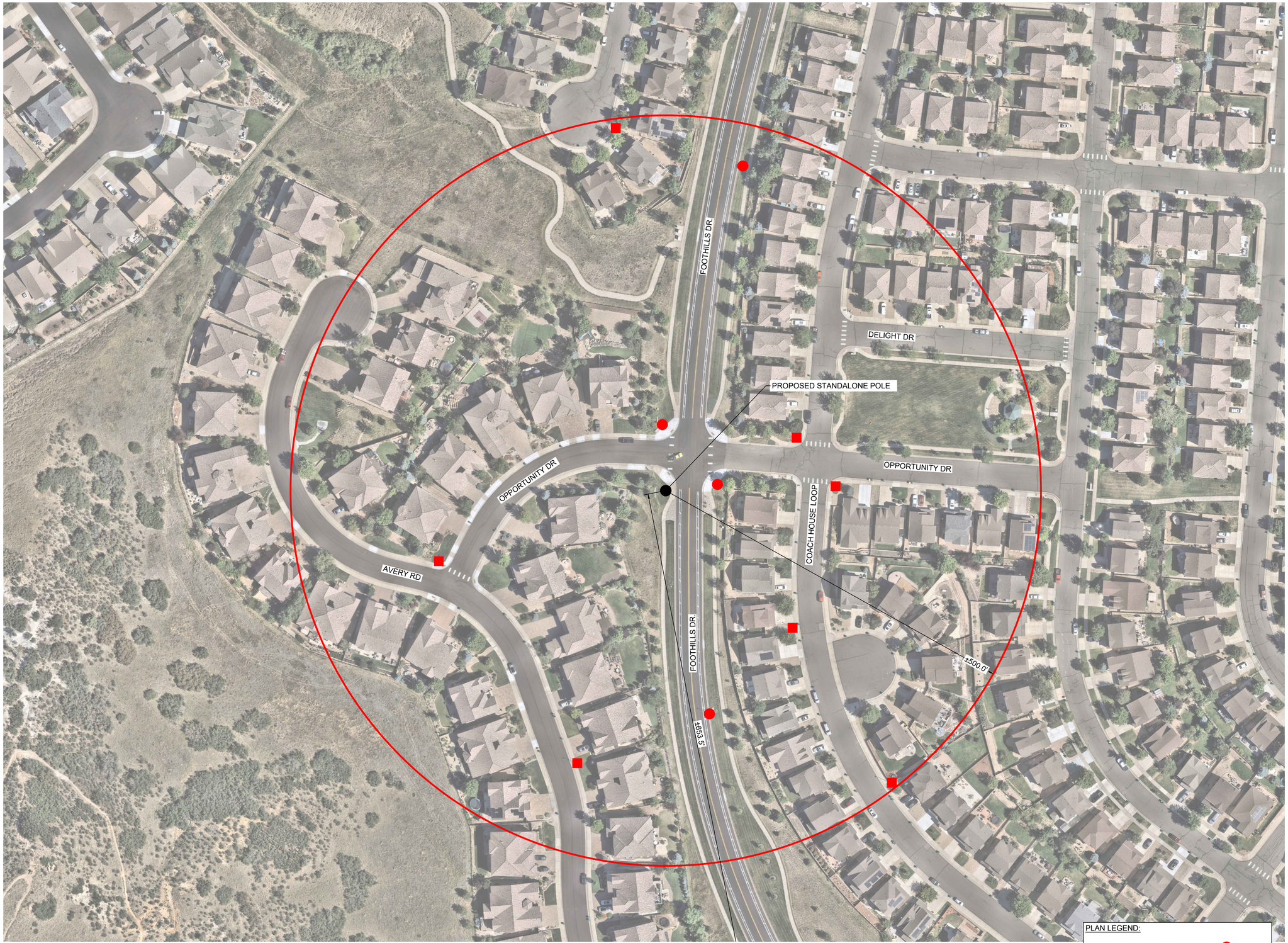

PLAN LEGEND:

25'-0" TALL STREET LIGHT POLE* =

20'-0" TALL RESIDENTIAL POLE* =

*HEIGHT VERIFICATION PER SATELLITE IMAGERY

SQF, LLC

16 MIDDLE ST, 4TH FLOOR
PORTLAND, ME 04101

PUBLIC WORKS CONSTRUCTION DOCUMENT

TOWN PROJECT NUMBER:
CD25-0059

PLANS PREPARED BY:

Kimley»Horn

6200 S SYRACUSE WAY. #300
GREENWOOD VILLAGE, CO 80111
PHONE (303) 228-2300
WWW.KIMLEY-HORN.COM

REV.	DATE	DESCRIPTION	BY
3	09/25/26	REVISED: POLE HEIGHT	WSG
2	12/16/25	REVISED:CITY COMMENTS	JAC
1	11/20/25	REVISED: CITY COMMENTS	WBB
0	09/02/25	100% FINAL CDs	SJB

DRAWN BY:	CHECKED BY:
SJB	XMJ

KHA PROJECT NUMBER:

296015001

TOWN APPROVAL BLOCK

TOWN OF CASTLE ROCK APPROVAL PLANS ARE HEREBY APPROVED FOR ONE YEAR FROM DATE OF DEVELOPMENT SERVICES APPROVAL

APPROVED BY:

DEVELOPMENT SERVICES

DATE

FOR REVIEW

PROJECT INFORMATION:

NODE NAME: DN2020BA_31LAB
(DN1462)

1991 FOOTHILLS DR
CASTLE ROCK, CO 80109
DOUGLAS COUNTY

SHEET TITLE:

ROW EXHIBIT

SHEET NUMBER:

EX-1 (5 OF 16)

LEGEND:

WATER LINE	W	STORM SEWER	ST
SANITARY SEWER	S	UG ELECTRIC	UGE
GAS LINE	G	ELECTRIC	E
FIBER LINE	FO	OH ELECTRIC	OHE
OH TELCO	OHT	UG UTILITIES	UG
UG TELCO	T	OH UTILITIES	OHU
FENCE	X	SIGNAGE	
RIGHT OF WAY		CATCH BASIN	CB
PROPERTY LINE		STORM MANHOLE	D
WATER METER	WM	STORM DRAIN INLET	
WATER VALVE	WV	SANITARY SEWER MH	S
HYDRANT		POWER POLE	
WATER MANHOLE	W	ELECTRIC HANDHOLE	E
TELCO PEDESTAL		ELECTRIC METER	EM
TELCO VAULT	T	ELECTRIC TRANSFORMER	ET
TELCO FIBER MANHOLE	FO	ELECTRIC CABINET	EC
TELCO MH	T	ELECTRIC EQUIPMENT	EQ
TELCO FIBER VAULT	FV	TRAFFIC SIGNAL BOX	TS
TELEVISION EQUIPMENT	TQ	ELECTRIC MANHOLE	E
GAS VAULT		LIGHT POLE	
GAS METER	GM	TRAFFIC SIGNAL	
GAS MANHOLE	G	ELECTRIC DOWN GUY	

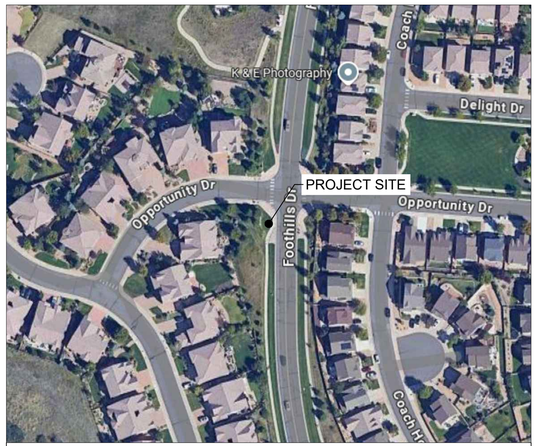

LOCAL MAP

LOCATION DESCRIPTION

THE PROPOSED WIRELESS STRUCTURE LYING WITHIN TOWN OF CASTLE ROCK RIGHT OF WAY, CONSISTING OF ± 35 SQ FT DISTURBANCE. THE CENTER OF SAID DISTURBANCE IS POSITIONED 9.4' WEST OF THE WEST CURB OF FOOTHILLS DR AND 37.2' SOUTH OF THE SOUTH CURB OF OPPORTUNITY DR

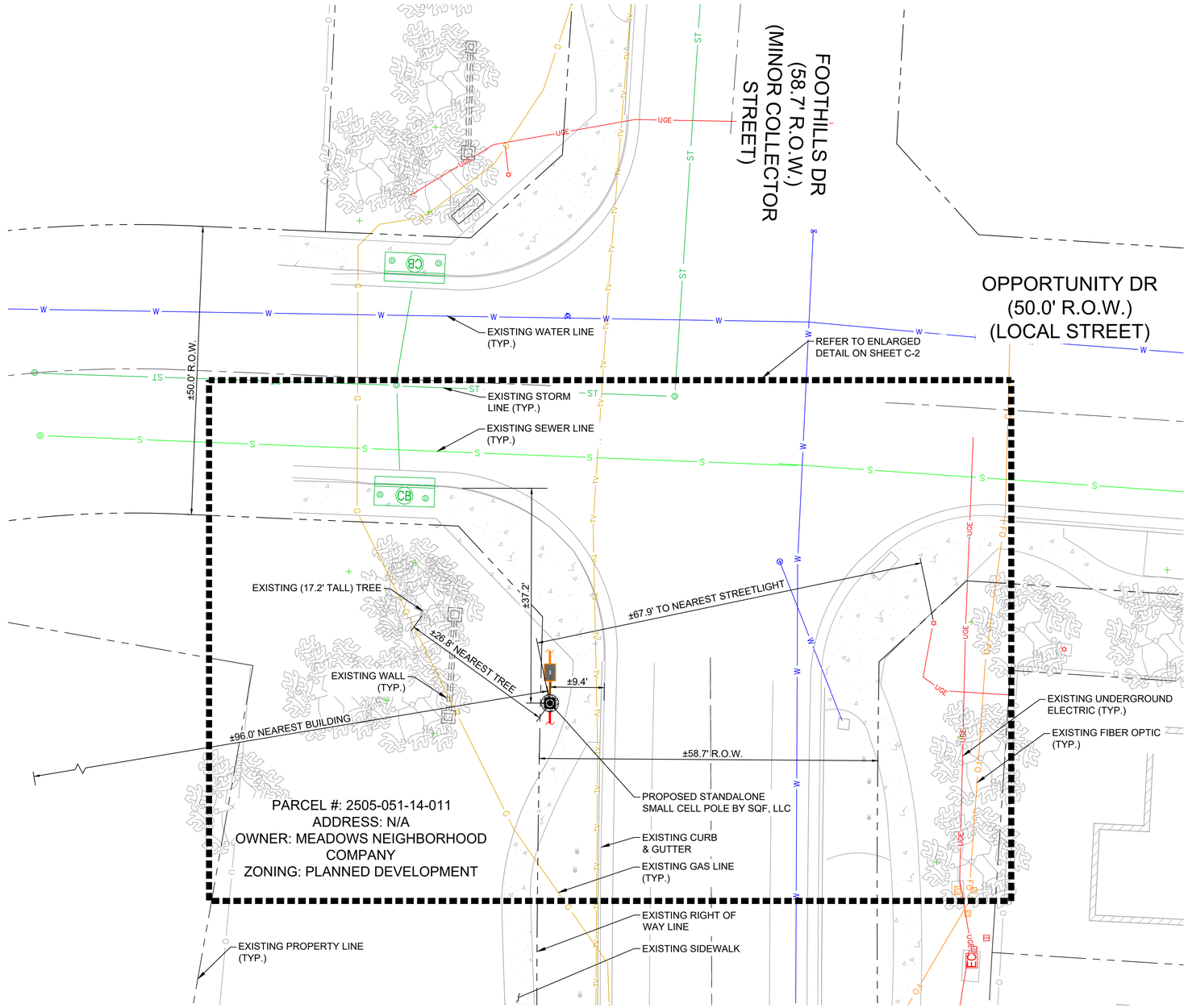

1 / C-1 **SITE PLAN**
SCALE: 1" = 10'
SCALE BASED ON 24"X36" ONLY

GRAPHIC SCALE IN FEET
0 5 10 20

NORTH

NOTE:
1. CONTRACTOR MUST FIELD VERIFY ALL MEASUREMENTS, UTILITY LOCATIONS, AND FIELD CONDITIONS PRIOR TO THE COMMENCEMENT OF CONSTRUCTION.

Know what's **below.**
Call before you dig.

SQF, LLC
16 MIDDLE ST, 4TH FLOOR
PORTLAND, ME 04101

PUBLIC WORKS CONSTRUCTION DOCUMENT

TOWN PROJECT NUMBER:
CD25-0059

PLANS PREPARED BY:

Kimley»Horn
6200 S SYRACUSE WAY. #300
GREENWOOD VILLAGE, CO 80111
PHONE (303) 228-2300
WWW.KIMLEY-HORN.COM

REV.	DATE	DESCRIPTION	BY
3	09/25/26	REVISED: POLE HEIGHT	WSG
2	12/16/25	REVISED:CITY COMMENTS	JAC
1	11/20/25	REVISED: CITY COMMENTS	WBB
0	09/02/25	100% FINAL CDs	SJB

DRAWN BY:	CHECKED BY:
SJB	XMJ

KHA PROJECT NUMBER:
296015001

TOWN APPROVAL BLOCK

TOWN OF CASTLE ROCK APPROVAL PLANS ARE HEREBY APPROVED FOR ONE YEAR FROM DATE OF DEVELOPMENT SERVICES APPROVAL

APPROVED BY:

DEVELOPMENT SERVICES

DATE

FOR REVIEW

PROJECT INFORMATION:

NODE NAME: DN2020BA_31LAB
(DN1462)

1991 FOOTHILLS DR
CASTLE ROCK, CO 80109
DOUGLAS COUNTY

SHEET TITLE:

SITE PLAN

SHEET NUMBER:

C-1 (6 OF 16)

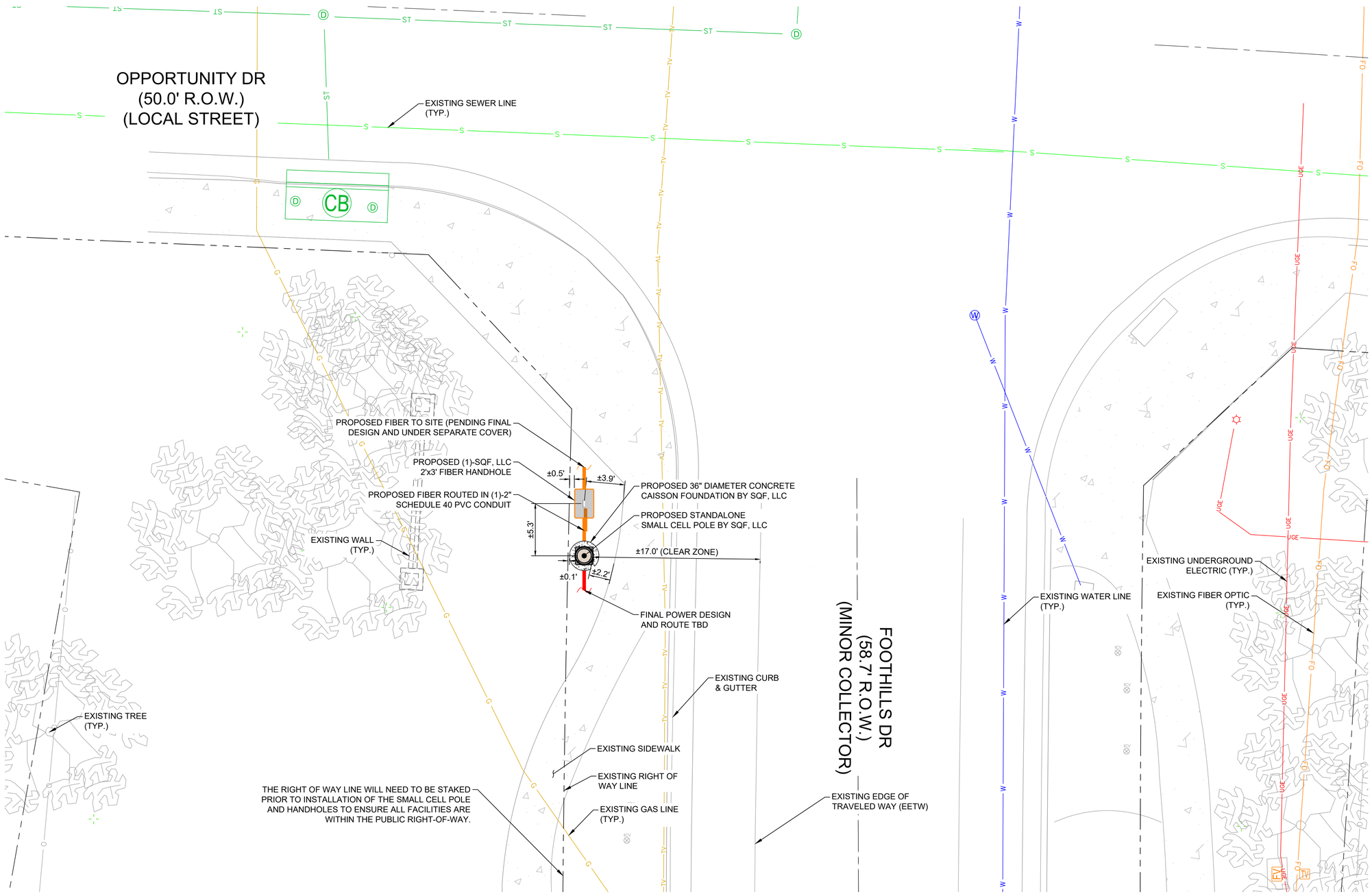

1 / C-2 **ENLARGED SITE PLAN**
SCALE: 1" = 5'
SCALE BASED ON 24"X36" ONLY

NORTH

GRAPHIC SCALE IN FEET
0 2.5 5 10

811 Know what's **below.** **Call** before you dig.

CONTRACTOR MUST FIELD VERIFY ALL MEASUREMENTS, UTILITY LOCATIONS, AND FIELD CONDITIONS PRIOR TO THE COMMENCEMENT OF CONSTRUCTION.

SQF, LLC

16 MIDDLE ST, 4TH FLOOR
PORTLAND, ME 04101

PUBLIC WORKS CONSTRUCTION DOCUMENT

TOWN PROJECT NUMBER:
CD25-0059

PLANS PREPARED BY:

Kimley»Horn

6200 S SYRACUSE WAY. #300
GREENWOOD VILLAGE, CO 80111
PHONE (303) 228-2300
WWW.KIMLEY-HORN.COM

REV.	DATE	DESCRIPTION	BY
3	09/25/26	REVISED: POLE HEIGHT	WSG
2	12/16/25	REVISED:CITY COMMENTS	JAC
1	11/20/25	REVISED: CITY COMMENTS	WBB
0	09/02/25	100% FINAL CDs	SJB

DRAWN BY: SJB
CHECKED BY: XMJ

KHA PROJECT NUMBER:
296015001

TOWN APPROVAL BLOCK

TOWN OF CASTLE ROCK APPROVAL PLANS ARE HEREBY APPROVED FOR ONE YEAR FROM DATE OF DEVELOPMENT SERVICES APPROVAL

APPROVED BY:

DEVELOPMENT SERVICES

DATE

FOR REVIEW

PROJECT INFORMATION:

NODE NAME: DN2020BA_31LAB
(DN1462)

1991 FOOTHILLS DR
CASTLE ROCK, CO 80109
DOUGLAS COUNTY

SHEET TITLE:

ENLARGED
SITE PLAN

SHEET NUMBER:

C-2 (7 OF 16)

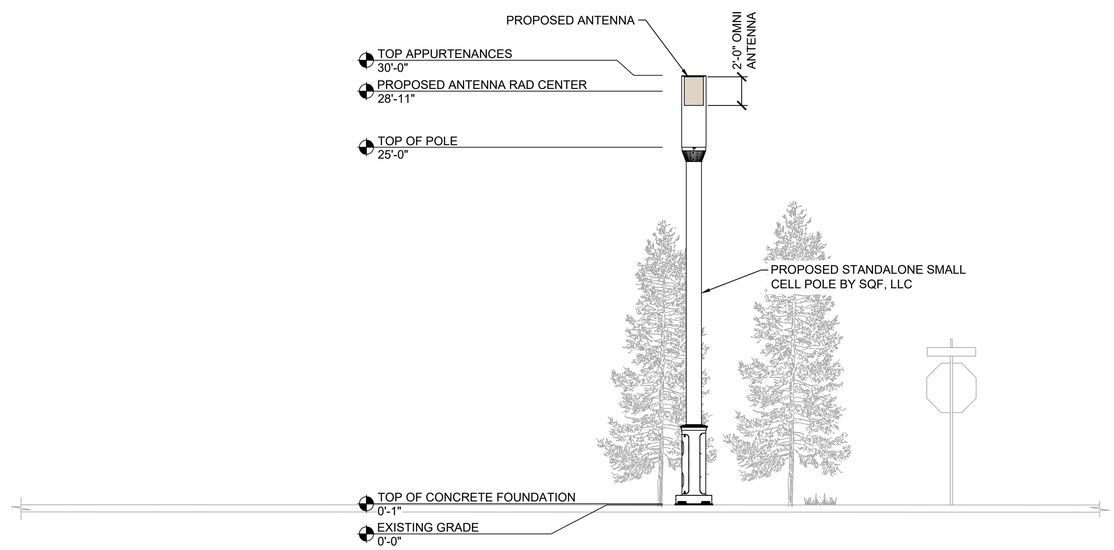

1
C-3

SITE ELEVATION

SCALE: 1"=5'
SCALE BASED ON 24"X36" ONLY

GRAPHIC SCALE IN FEET
0 2.5 5 10

- ANTENNA, SHROUD, AND POLE TO BE FINISHED IN A COLOR THAT MATCHES TRAFFIC BLACK (RAL COLOR CODE #9017).
- POLE AND FOUNDATION, LIGHTARM AND LUMINAIRE TO BE INSTALLED BY SQF, LLC.
- ALL EXPOSED STEEL, EQUIPMENT, MOUNTING BRACKETS, CABLES, ANTENNAS AND MISC. PARTS SHALL BE PAINTED.

811
Know what's **below.**
Call before you dig.

SQF, LLC

16 MIDDLE ST, 4TH FLOOR
PORTLAND, ME 04101

PUBLIC WORKS CONSTRUCTION DOCUMENT

TOWN PROJECT NUMBER:
CD25-0059

PLANS PREPARED BY:

Kimley»Horn

6200 S SYRACUSE WAY. #300
GREENWOOD VILLAGE, CO 80111
PHONE (303) 228-2300
WWW.KIMLEY-HORN.COM

REV.	DATE	DESCRIPTION	BY
3	09/25/26	REVISED: POLE HEIGHT	WSG
2	12/16/25	REVISED:CITY COMMENTS	JAC
1	11/20/25	REVISED: CITY COMMENTS	WBB
0	09/02/25	100% FINAL CDs	SJB

DRAWN BY:	CHECKED BY:
SJB	XMJ

KHA PROJECT NUMBER:
296015001

TOWN APPROVAL BLOCK

TOWN OF CASTLE ROCK APPROVAL PLANS ARE HEREBY APPROVED FOR ONE YEAR FROM DATE OF DEVELOPMENT SERVICES APPROVAL

APPROVED BY:

DEVELOPMENT SERVICES

DATE

FOR REVIEW

PROJECT INFORMATION:

NODE NAME: DN2020BA_31LAB
(DN1462)

1991 FOOTHILLS DR
CASTLE ROCK, CO 80109
DOUGLAS COUNTY

SHEET TITLE:

SITE ELEVATION

SHEET NUMBER:

C-3 (8 OF 16)

AASHTO CLEAR ZONE CHECKLIST

ROADWAY NAME	FOOTHILLS DRIVE
SPEED LIMIT	30 MPH
ROAD CLASSIFICATION	MINOR COLLECTOR
ADT (PROVIDED BY JURISDICTION)	6443
LOCATED ON FORESLOPE OR BACKSLOPE	BACKSLOPE
SLOPE	≤1V/6H
CLEAR ZONE RECOMMENDATION (AASHTO ROADSIDE DESIGN GUIDE, TABLE 3-1)	14'-16'
ACTUAL DESIGN CLEAR ZONE	17.0'
MITIGATION REQUIRED?	N/A
JUSTIFICATION	N/A

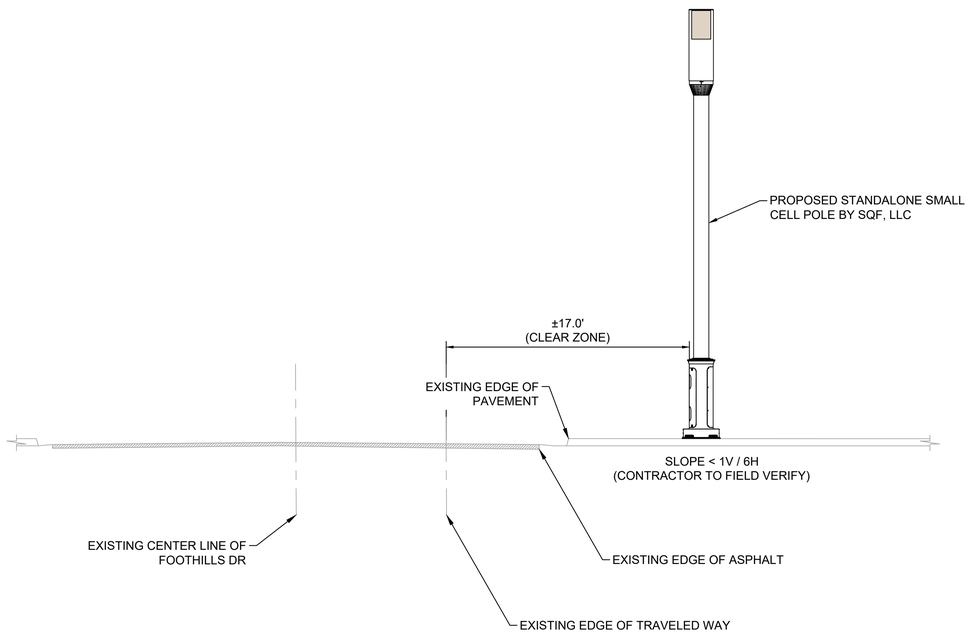

1
C-3.1

SITE ELEVATION

SCALE: 1"=5'
SCALE BASED ON 24"X36" ONLY

GRAPHIC SCALE IN FEET
0 2.5 5 10

- ANTENNA, SHROUD, AND POLE TO BE FINISHED IN A COLOR THAT MATCHES TRAFFIC BLACK (RAL COLOR CODE #9017).
- POLE AND FOUNDATION, LIGHTARM AND LUMINAIRE TO BE INSTALLED BY SQF, LLC.
- ALL EXPOSED STEEL, EQUIPMENT, MOUNTING BRACKETS, CABLES, ANTENNAS AND MISC. PARTS SHALL BE PAINTED.

Know what's **below.**
Call before you dig.

SQF, LLC

16 MIDDLE ST, 4TH FLOOR
PORTLAND, ME 04101

PUBLIC WORKS CONSTRUCTION DOCUMENT

TOWN PROJECT NUMBER:
CD25-0059

PLANS PREPARED BY:

Kimley»Horn

6200 S SYRACUSE WAY. #300
GREENWOOD VILLAGE, CO 80111
PHONE (303) 228-2300
WWW.KIMLEY-HORN.COM

REV.	DATE	DESCRIPTION	BY
3	09/25/26	REVISED: POLE HEIGHT	WSG
2	12/16/25	REVISED:CITY COMMENTS	JAC
1	11/20/25	REVISED: CITY COMMENTS	WBB
0	09/02/25	100% FINAL CDs	SJB

DRAWN BY:	CHECKED BY:
SJB	XMJ

KHA PROJECT NUMBER:
296015001

TOWN APPROVAL BLOCK

TOWN OF CASTLE ROCK APPROVAL PLANS ARE HEREBY APPROVED FOR ONE YEAR FROM DATE OF DEVELOPMENT SERVICES APPROVAL

APPROVED BY:

DEVELOPMENT SERVICES

DATE

FOR REVIEW

PROJECT INFORMATION:

NODE NAME: DN2020BA_31LAB
(DN1462)

1991 FOOTHILLS DR
CASTLE ROCK, CO 80109
DOUGLAS COUNTY

SHEET TITLE:

SITE ELEVATION

SHEET NUMBER:

C-3.1 (9 OF 16)

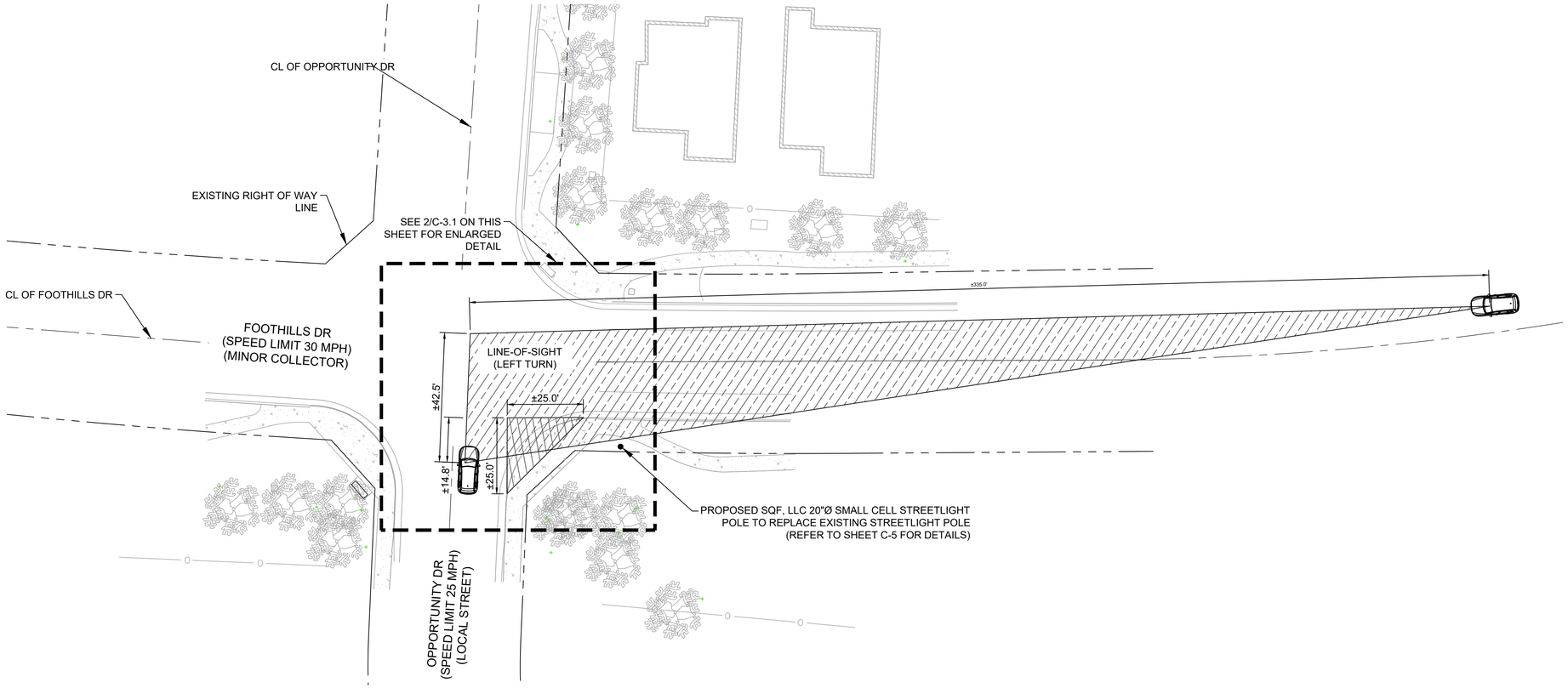

1 C-3.2 SIGHT DISTANCE PLAN
SCALE: 1" = 20'
SCALE BASED ON 24"X36" ONLY

GRAPHIC SCALE IN FEET
0 10 20 40

NORTH

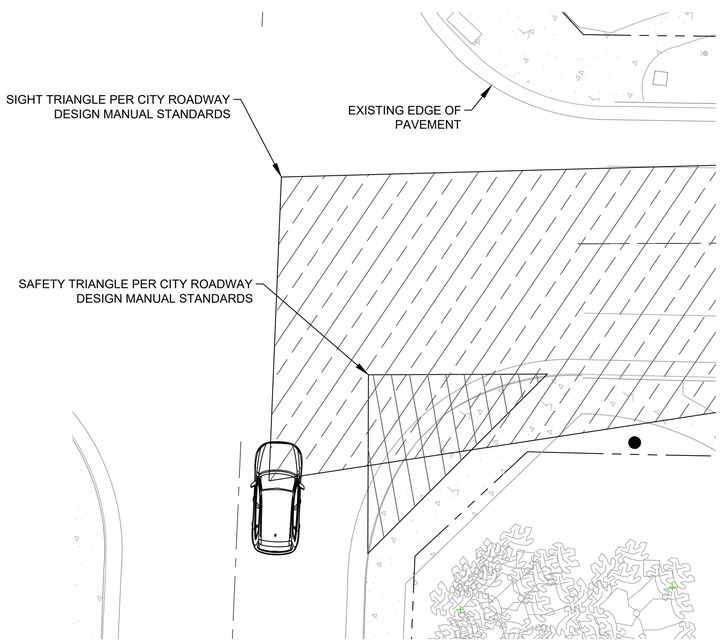

2 C-3.2 ENLARGED SIGHT DISTANCE PLAN
SCALE: 1" = 10'
SCALE BASED ON 24"X36" ONLY

DESIGN SPEED	20 MPH	25 MPH	30 MPH	35 MPH	40 MPH	45 MPH	50 MPH
LEFT TURN SIGHT DISTANCE	225	280	335	390	445	500	555
RIGHT TURN SIGHT DISTANCE	195	240	290	335	385	430	480

SIGHT TRIANGLE SHOWN PER SECTION 2.4.7 (DEPARTURE SITE DISTANCE) THRU 2.4.9 (INTERSECTION SAFETY TRIANGLE), TOWN OF CASTLE ROCK TRANSPORTATION DESIGN CRITERIA MANUAL AND DOES NOT CONSTITUTE A COMPLETE AASHTO SIGHT DISTANCE REVIEW AND ANALYSIS

811 Know what's below. Call before you dig.

SQF, LLC
16 MIDDLE ST, 4TH FLOOR
PORTLAND, ME 04101

PUBLIC WORKS CONSTRUCTION DOCUMENT
TOWN PROJECT NUMBER:
CD25-0059

PLANS PREPARED BY:
Kimley»Horn
6200 S SYRACUSE WAY. #300
GREENWOOD VILLAGE, CO 80111
PHONE (303) 228-2300
WWW.KIMLEY-HORN.COM

REV.	DATE	DESCRIPTION	BY
3	09/25/26	REVISED: POLE HEIGHT	WSG
2	12/16/25	REVISED:CITY COMMENTS	JAC
1	11/20/25	REVISED: CITY COMMENTS	WBB
0	09/02/25	100% FINAL CDs	SJB

DRAWN BY: SJB
CHECKED BY: XMJ

KHA PROJECT NUMBER:
296015001

TOWN APPROVAL BLOCK
TOWN OF CASTLE ROCK APPROVAL PLANS ARE HEREBY APPROVED FOR ONE YEAR FROM DATE OF DEVELOPMENT SERVICES APPROVAL

APPROVED BY:

DEVELOPMENT SERVICES

DATE

FOR REVIEW

PROJECT INFORMATION:
NODE NAME: DN2020BA_31LAB (DN1462)
1991 FOOTHILLS DR
CASTLE ROCK, CO 80109
DOUGLAS COUNTY

SHEET TITLE:
SIGHT DISTANCE PLAN

SHEET NUMBER:
C-3.2 (10 OF 16)

ANTENNA AND CABLE SCHEDULE

SECTOR	ANTENNA MODEL	AZIMUTH	MOUNTING HEIGHT (AGL)	ANTENNA SPECS	MECH. DOWNTILT	ELECTRIC. DOWNTILT	CABLE SIZE	CABLE LENGTH
OMNI	JMA WIRELESS CYL2Q16R-2xy	OMNI	28'-11"	(OMNI) 2.32 FT^3	0°	4°	4-COAX	±5'

NOTES:

1. LENGTHS ARE ESTIMATES, CONTRACTOR AND/OR CONSTRUCTION MANAGER SHALL FIELD VERIFY ALL LENGTHS PRIOR TO ORDERING.
2. ALL AZIMUTHS SHOWN ARE RELATIVE TO TRUE NORTH (UNLESS OTHERWISE STATED)
3. IT SHALL BE THE CONTRACTOR'S RESPONSIBILITY TO VERIFY AZIMUTHS DEPICTED HEREIN WITH THE RF DEPARTMENT PRIOR TO INSTALLING ANY ANTENNAS

EQUIPMENT VOLUME TABLE

DESCRIPTION	INCLUDES	VOLUME (FT^3)
ANTENNA	(1)-JMA CYL2Q16R-2XY OMNI ANTENNA	2.32 FT^3
PROPOSED ACCESSORY EQUIPMENT	POWER PANEL, FIBER MANAGEMENT BOX, (POD-8), APAM	1.5FT^3
RADIOS & DIPLEXERS	(2)-RADIOS (2)-DIPLEXERS	2.16FT^3 0.04FT^3
UTILITY	DISCONNECT	0.9FT^3
UTILITY	METER	0.79FT^3

*TOTAL ANTENNA SHROUD VOLUME PER MANUFACTURER. INCLUDES ALL ANTENNAS, PROJECTIONS, HARDWARE, AND CONCEALMENT ELEMENTS

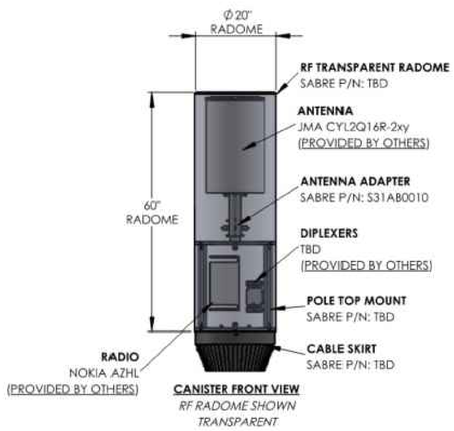

1 C-4 ANTENNA MOUNTING ELEVATION
N.T.S.

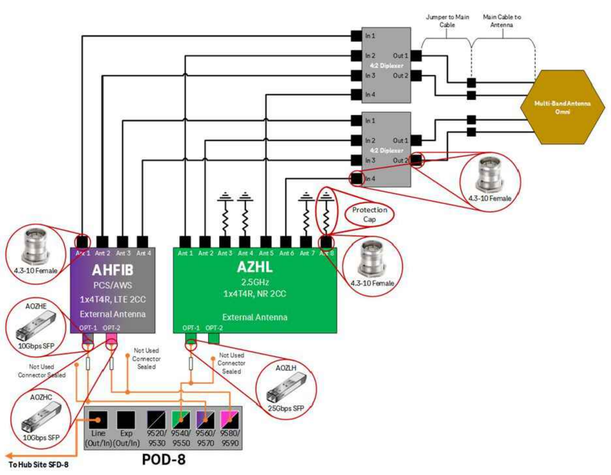

2 C-4 PLUMBING DIAGRAM
N.T.S.

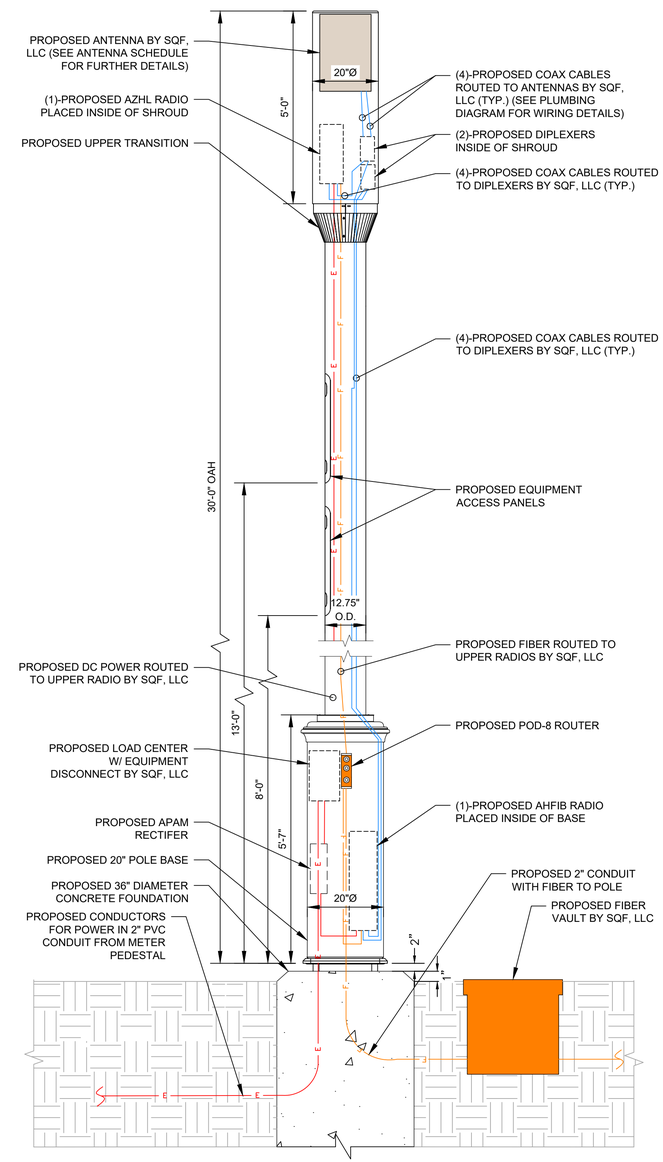

3 C-4 POLE EQUIPMENT ELEVATION
N.T.S.

Know what's below. Call before you dig.

SQF, LLC

16 MIDDLE ST, 4TH FLOOR
PORTLAND, ME 04101

PUBLIC WORKS CONSTRUCTION DOCUMENT

TOWN PROJECT NUMBER:
CD25-0059

PLANS PREPARED BY:

Kimley»Horn

6200 S SYRACUSE WAY. #300
GREENWOOD VILLAGE, CO 80111
PHONE (303) 228-2300
WWW.KIMLEY-HORN.COM

REV.	DATE	DESCRIPTION	BY
3	09/25/26	REVISED: POLE HEIGHT	WSG
2	12/16/25	REVISED:CITY COMMENTS	JAC
1	11/20/25	REVISED: CITY COMMENTS	WBB
0	09/02/25	100% FINAL CDs	SJB

DRAWN BY: SJB
CHECKED BY: XMJ

KHA PROJECT NUMBER: 296015001

TOWN APPROVAL BLOCK

TOWN OF CASTLE ROCK APPROVAL PLANS ARE HEREBY APPROVED FOR ONE YEAR FROM DATE OF DEVELOPMENT SERVICES APPROVAL

APPROVED BY:

DEVELOPMENT SERVICES

DATE

FOR REVIEW

PROJECT INFORMATION:

NODE NAME: DN2020BA_31LAB (DN1462)

1991 FOOTHILLS DR
CASTLE ROCK, CO 80109
DOUGLAS COUNTY

SHEET TITLE:

POLE EQUIPMENT ELEVATIONS & DETAILS

SHEET NUMBER:

C-4 (11 OF 16)

1 C-5 EME SIGNAGE

(2) SIGNS TO BE ATTACHED. ONE FACING THE STREET. ONE WILL BE ON THE OPPOSITE SIDE 180 DEGREES FROM THE FIRST

EME SIGNAGE ATTACHMENT:

ON WOOD POLES - SIGN ON ALUMINUM WITH STAINLESS LAG SCREW TO THE POLE

ON METAL POLES - ADHESIVE VINYL OR PLACARD STRAPPED WITH STAINLESS STEEL TIES (PAINT TIES TO MATCH POLE)

ON CONCRETE/COMPOSITE - PLACARD STRAPPED WITH STAINLESS TIES.

PLACEMENT - REF EME REPORT

2 C-5 NOC SIGNAGE

N.T.S.

OWNER/OPERATOR NOTIFICATION PLAQUE

CONTRACTOR SHALL ADD SITE ID# ON NOTIFICATION PLAQUE

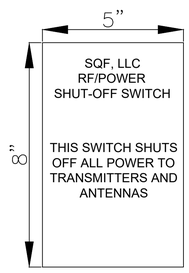

3 C-5 SQF, LLC DISCONNECT SIGNAGE

N.T.S.

RF DISCONNECT NOTE:

RF/POWER DISCONNECT SIGNAGE TO BE PLACED ON OUTSIDE OF DOOR OF DISCONNECT ACCESS PANEL

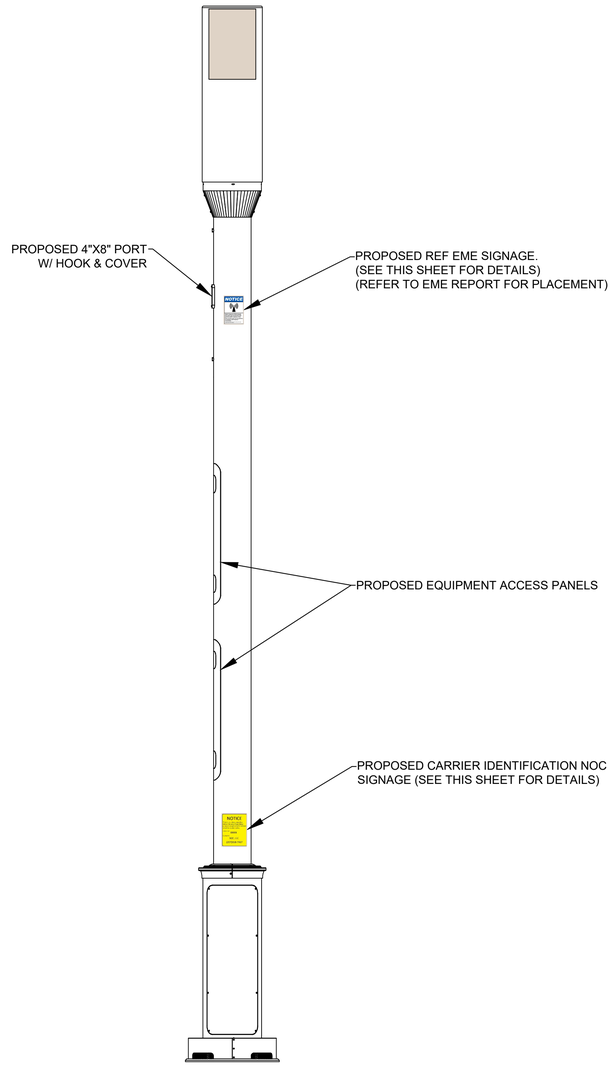

4 C-5 SIGNAGE ELEVATION

N.T.S.

SQF, LLC

16 MIDDLE ST, 4TH FLOOR
PORTLAND, ME 04101

PUBLIC WORKS CONSTRUCTION DOCUMENT

TOWN PROJECT NUMBER:
CD25-0059

PLANS PREPARED BY:

Kimley»Horn

6200 S SYRACUSE WAY. #300
GREENWOOD VILLAGE, CO 80111
PHONE (303) 228-2300
WWW.KIMLEY-HORN.COM

REV.	DATE	DESCRIPTION	BY
3	09/25/26	REVISED: POLE HEIGHT	WSG
2	12/16/25	REVISED:CITY COMMENTS	JAC
1	11/20/25	REVISED: CITY COMMENTS	WBB
0	09/02/25	100% FINAL CDs	SJB

DRAWN BY:	CHECKED BY:
SJB	XMJ

KHA PROJECT NUMBER:
296015001

TOWN APPROVAL BLOCK

TOWN OF CASTLE ROCK APPROVAL PLANS ARE HEREBY APPROVED FOR ONE YEAR FROM DATE OF DEVELOPMENT SERVICES APPROVAL

APPROVED BY:

DEVELOPMENT SERVICES

DATE

FOR REVIEW

PROJECT INFORMATION:

NODE NAME: DN2020BA_31LAB (DN1462)

1991 FOOTHILLS DR
CASTLE ROCK, CO 80109
DOUGLAS COUNTY

SHEET TITLE:

SIGNAGE DETAILS

SHEET NUMBER:

C-5 (12 OF 16)

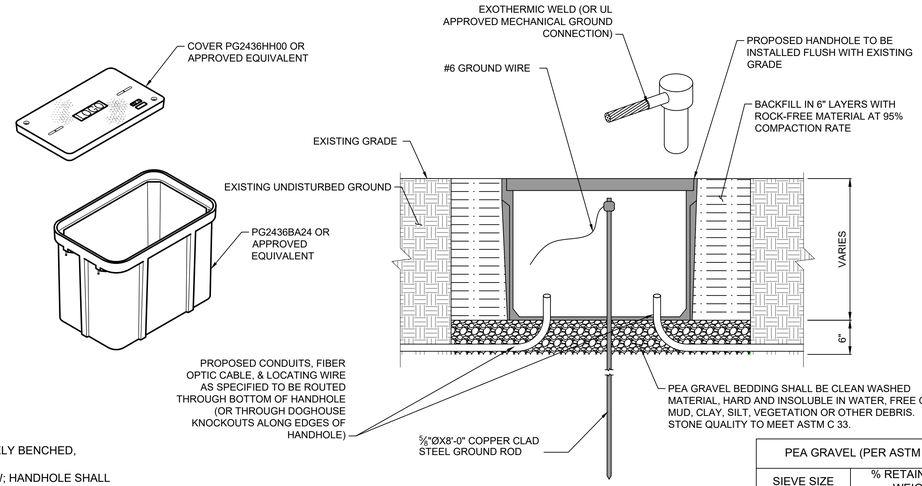

PEA GRAVEL (PER ASTM C 33)	
SIEVE SIZE	% RETAINED BY WEIGHT
3/4"	0
1/2"	0-25
1/4"	90-100

NOTES:

1. VOID UNEXCAVATED AREAS TO BE BACKFILLED WITH SELECT MATERIAL.
2. BOTTOM OF EXCAVATED PIT TO BE BACKFILLED WITH 6" OF PEA GRAVEL.
3. CONTRACTOR TO NOTE THAT SHORING MAY BE REQUIRED DURING CONSTRUCTION.
4. ALL EXCAVATIONS OR TRENCHES 4 FEET OR GREATER IN DEPTH SHALL BE APPROPRIATELY BENCHED, SHORED, OR SLOPED IN OHSA'S EXCAVATION STANDARD, 29 CFR 1926.620, .651 & .652.
5. TOP OF HANDHOLE SHALL BE PLACED FLUSH WITH EXISTING GRADE OR SLIGHTLY BELOW; HANDHOLE SHALL NEVER BE PLACED ABOVE EXISTING GRADE.
11. ALL HANDHOLE/MANHOLES SHALL BE INSTALLED IN ACCORDANCE WITH MANUFACTURER'S RECOMMENDATIONS.
12. ANY SIDEWALK DAMAGED DURING CONSTRUCTION SHALL BE REPLACED TO MATCH EXISTING. FULL SIDEWALK PANELS SHALL BE REMOVED AND REPLACED FOR THE INSTALLATION OF THE HANDHOLE PER THE JURISDICTION'S ROADWAY DESIGN MANUAL.

1 / C-6 HANDHOLE CONSTRUCTION DETAIL
N.T.S.

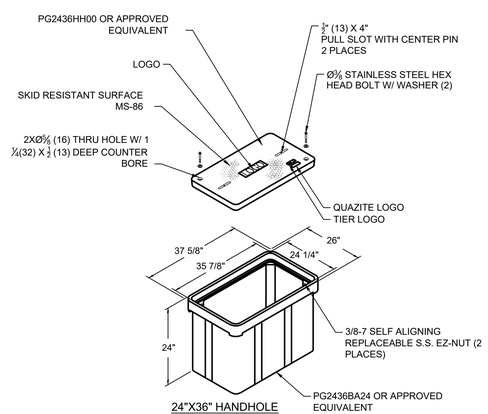

NOTES:

1. CONDUIT SHALL BE ALIGNED AND WITHIN CENTERLINE OF PULL BOX MINIMIZING CONDUIT BENDS FOR FIBER PULL.
2. CONDUIT PLUGS SHALL BE INSTALLED IN ALL EMPTY CONDUITS & ALL CONDUITS CONTAINING CABLES.
3. WEATHER PROOF TAGS SHALL BE INSTALLED ON ALL FIBER CABLES
4. TRACER WIRE AND PULL ROPE SHALL BE INCLUDED IN THE CONDUIT. TRACER WIRE SHALL NOT BE INCLUDED IN THE SAME INNERDUCT OR CONDUIT AS FIBER OPTIC CABLES.
5. FIBER OPTIC SLACK COILS INSTALLED WITHIN PULL BOXES SHALL BE TIED TO EACH CABLE RACK. PLASTIC CABLE/WIRE TIES SHALL NOT BE ALLOWED. CAUTION SHALL BE TAKEN WHILE COILING ALL FIBER. FIBER COILING SHALL BE COMPLETED PER FIBER MANUFACTURES RECOMMENDATIONS.
6. CONTRACTOR SHALL VERIFY ALL INSTALLATION METHODS, MATERIALS AND TECHNIQUES WITH VAULT MANUFACTURES RECOMMENDED SPECIFICATIONS AND WARRANTY REQUIREMENTS.
7. ALL SOIL PREPARATION AND INSTALLATION SHALL BE COORDINATED WITH LOCAL JURISDICTIONS AND GEOTECHNICAL REPORT AND SPECIFICATIONS.
8. ALL IN-GRADE HANDHOLES SHALL BE INCIDENTAL TRAFFIC RATED TO TIER 15 MINIMUM UNLESS OTHERWISE NOTED.

2 / C-6 HANDHOLE AND VAULT DETAIL
N.T.S.

SQF, LLC
16 MIDDLE ST, 4TH FLOOR
PORTLAND, ME 04101

PUBLIC WORKS CONSTRUCTION DOCUMENT

TOWN PROJECT NUMBER:
CD25-0059

PLANS PREPARED BY:

Kimley»Horn
6200 S SYRACUSE WAY. #300
GREENWOOD VILLAGE, CO 80111
PHONE (303) 228-2300
WWW.KIMLEY-HORN.COM

REV.	DATE	DESCRIPTION	BY
3	09/25/26	REVISED: POLE HEIGHT	WSG
2	12/16/25	REVISED:CITY COMMENTS	JAC
1	11/20/25	REVISED: CITY COMMENTS	WBB
0	09/02/25	100% FINAL CDs	SJB

DRAWN BY:	CHECKED BY:
SJB	XMJ

KHA PROJECT NUMBER:
296015001

TOWN APPROVAL BLOCK

TOWN OF CASTLE ROCK APPROVAL PLANS ARE HEREBY APPROVED FOR ONE YEAR FROM DATE OF DEVELOPMENT SERVICES APPROVAL

APPROVED BY:

DEVELOPMENT SERVICES

DATE

FOR REVIEW

PROJECT INFORMATION:

NODE NAME: DN2020BA_31LAB (DN1462)

1991 FOOTHILLS DR
CASTLE ROCK, CO 80109
DOUGLAS COUNTY

SHEET TITLE:

HANDHOLE DETAILS

SHEET NUMBER:

C-6 (13 OF 16)

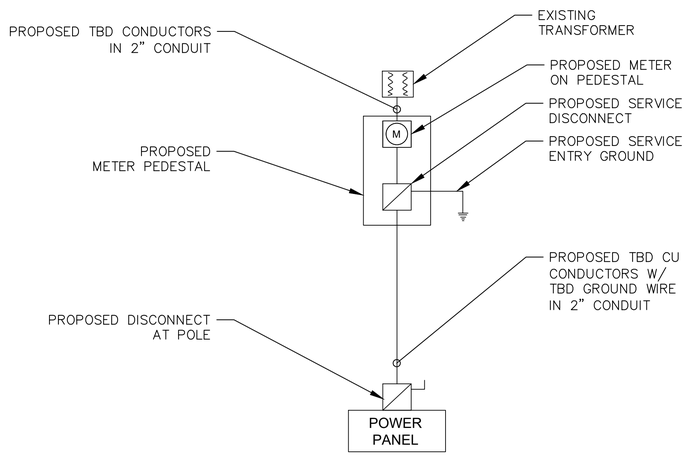

1 E-1 **ONE-LINE DIAGRAM**
SCALE: N.T.S.

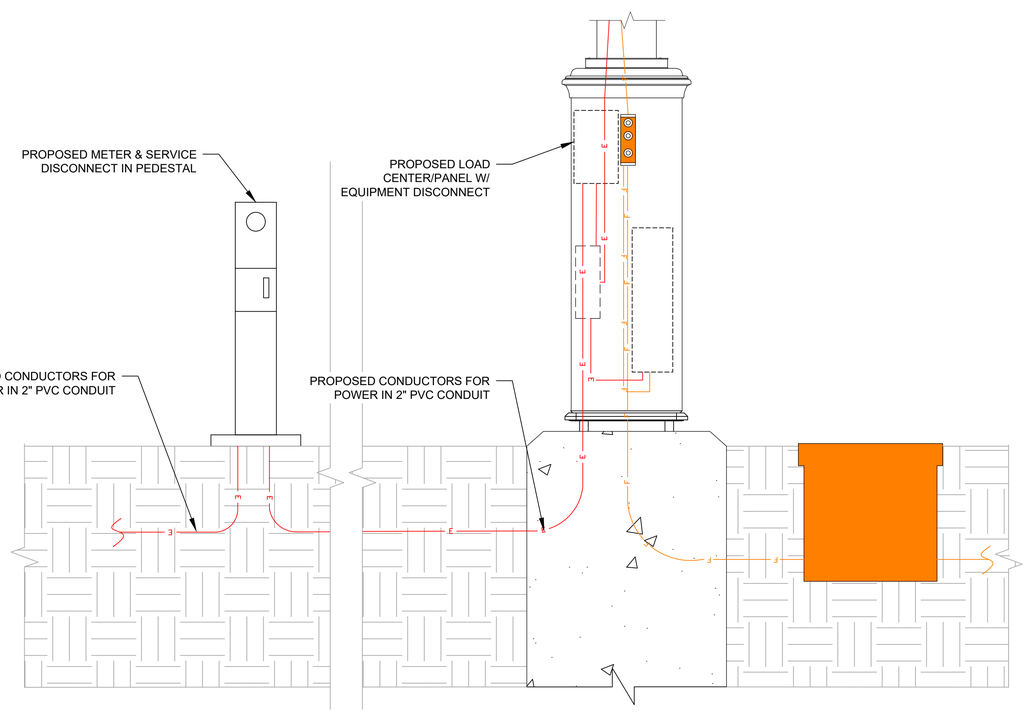

2 E-1 **ELECTRICAL ELEVATION**
SCALE: N.T.S.

PANEL CIRCUIT AND LOAD SCHEDULE

SERVICE: 120/240V, 60A, 1ø, 3W
DESIGNATION: PANEL SCHEDULE
LOCATION: PANEL AT TOWER BASE

	LOAD DESCRIPTION	P	UNIT VA	LOAD PER PHASE (VA) A	LOAD PER PHASE (VA) B	LOADS CONTINUOUS	LOADS NON-CONT.	LOADS SUB-PANEL	WIRE SIZE	GROUNDING WIRE SIZE	TRIP
1	SPARE	–	–	–		–	–	–	–	–	–
1	APAM	2P	2500	1250		X	–	–	10	(10)	20A
2					1250						
2	SPARE	–	–		–	–	–	–	–	–	–
3	SPARE	–	–	–		–	–	–	–	–	–
3	GFCI	1P	180	180		X	–	–	14	(14)	15A
4	FANS	1P	150		150	X	–	–	14	(14)	15A
4	SPARE	–	–		–	–	–	–	–	–	–
5	SPARE	–	–	–		–	–	–	–	–	–
5	SPARE	–	–	–		–	–	–	–	–	–
6	SPARE	–	–		–	–	–	–	–	–	–
6	SPARE	–	–		–	–	–	–	–	–	–
	SUBTOTAL CONTINUOUS			1430	1400						
	SUBTOTAL NON-CONT.			–	–						

VOLTAGE: 120/240V | CYCLE: 60Hz | PHASE: 1 | WIRE: 3
MAIN BREAKER: 60A | TRIP: 60A | A.I.C.: 10,000A
MAIN LUGS: N/A | MAIN COPPER BUS: 125A
MAINS: TOP [ ] BOTTOM [X]

		A	B
MANUFACTURER: RAYCAP	kVA	1.430	1.400
MODEL: RSAC-7239 (OR SIMILAR)	MAX AMPS	11.79	
NO EQUAL [ ] APPROVED EQUAL [X]	x125%	14.74	
MOUNTING: SURFACE: [X] FLUSH: [ ]			

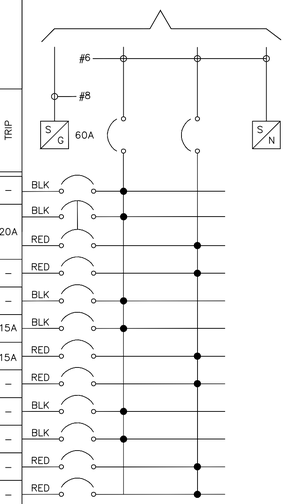

NOTES:
1. ELECTRICAL SERVICE IS 60A, 120/240V, 1 PHASE, 3 WIRE
2. SERVICE SHALL BE INSTALLED WITH A BREAKER-TYPE DISCONNECT
3. FOR COMPLETE INTERNAL WIRING AND ARRANGEMENT, REFER TO VENDOR PRINTS BY TOWER/EQUIPMENT CABINET MANUFACTURER FOR DETAILS.
4. PROPOSED POWER DEMAND IS 14.74A (MAX).
5. CONTRACTOR TO INSTALL SCH80 PVC FOR ALL CONDUIT SWEEPS, OTHERWISE SCH40 IS ACCEPTABLE EXCEPT WHERE NOTED.
6. THWN/USE WIRING TO BE USED FOR ALL CONDUCTORS SUPPLIED BY CONTRACTOR.

3 E-1 **PANEL CIRCUIT AND LOAD SCHEDULE**
SCALE: N.T.S.

SQF, LLC
16 MIDDLE ST, 4TH FLOOR
PORTLAND, ME 04101

PUBLIC WORKS CONSTRUCTION DOCUMENT
TOWN PROJECT NUMBER: CD25-0059

PLANS PREPARED BY:

Kimley»Horn
6200 S SYRACUSE WAY. #300
GREENWOOD VILLAGE, CO 80111
PHONE (303) 228-2300
WWW.KIMLEY-HORN.COM

REV.	DATE	DESCRIPTION	BY
3	09/25/26	REVISED: POLE HEIGHT	WSG
2	12/16/25	REVISED:CITY COMMENTS	JAC
1	11/20/25	REVISED: CITY COMMENTS	WBB
0	09/02/25	100% FINAL CDs	SJB

DRAWN BY: SJB | CHECKED BY: XMJ
KHA PROJECT NUMBER: 296015001

TOWN APPROVAL BLOCK
TOWN OF CASTLE ROCK APPROVAL PLANS ARE HEREBY APPROVED FOR ONE YEAR FROM DATE OF DEVELOPMENT SERVICES APPROVAL
APPROVED BY:
DEVELOPMENT SERVICES
DATE

FOR REVIEW

PROJECT INFORMATION:
NODE NAME: DN2020BA_31LAB (DN1462)
1991 FOOTHILLS DR
CASTLE ROCK, CO 80109
DOUGLAS COUNTY

SHEET TITLE:
ELECTRICAL DETAILS

SHEET NUMBER:
E-1 (14 OF 16)

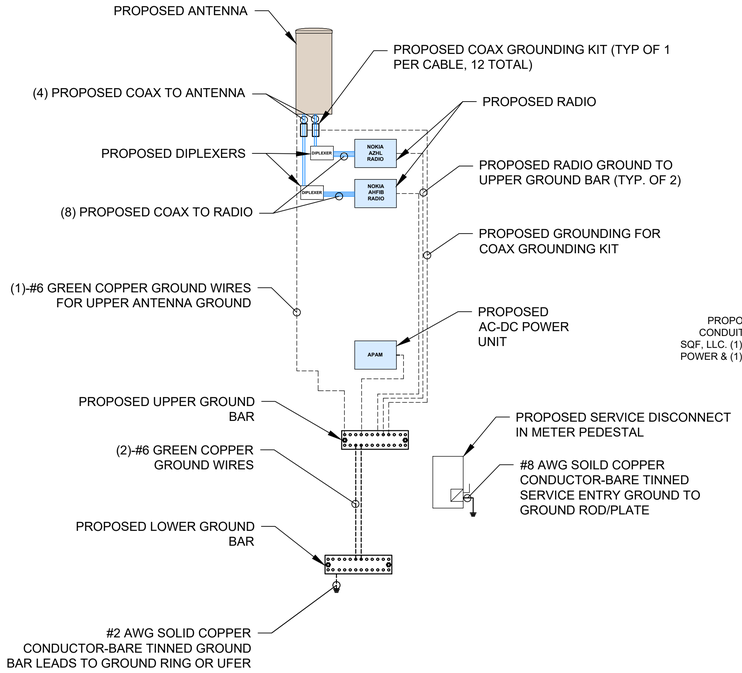

1 G-1 GROUNDING SCHEMATIC
SCALE: N.T.S.

NOTE:
CONDUIT LAYOUT SHOWN FOR ILLUSTRATION PURPOSES ONLY, KIMLEY-HORN HAS NOT REVIEWED FOR COMPATIBILITY WITH FOUNDATION DESIGN (BY OTHERS). CONTACT POLE MANUFACTURER FOR PLACEMENT REQUIREMENTS.

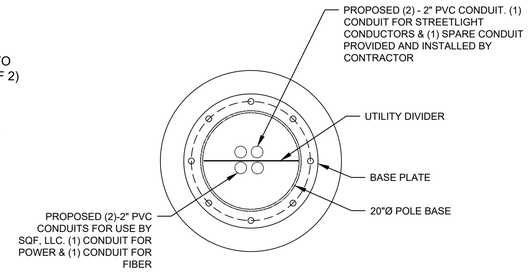

3 G-1 CONDUIT PLAN
SCALE: N.T.S.

GROUNDING NOTES:

1. **GROUNDING SHALL COMPLY WITH ARTICLE 250 OF THE NATIONAL ELECTRIC CODE.**
2. **ALL GROUNDING DEVICES SHALL BE U.L. APPROVED OR LISTED FOR THEIR INTENDED USE.**
3. **ALL WIRES SHALL BE AWG THHN/THWN COPPER UNLESS NOTED OTHERWISE.**
4. **GROUNDING CONNECTIONS SHALL BE EXOTHERMIC ("CADWELDS") TO GROUND RODS, GROUND RING WIRE, AND FENCE POSTS UNLESS NOTED OTHERWISE. CLEAN SURFACES TO SHINY METAL. WHERE GROUND WIRES ARE CADWELDED TO GALVANIZED SURFACES, SPRAY CADWELD WITH GALVANIZED PAINT.**
5. **GROUNDING CONNECTIONS TO GROUND BARS ARE TO BE TWO-HOLE BRASS MECHANICAL CONNECTORS WITH STAINLESS STEEL HARDWARE (INCLUDING SCREW SET.) CLEAN GROUND BAR TO SHINY METAL AFTER MECHANICAL CONNECTION, TREAT WITH PROTECTIVE ANTIOXIDANT COATING.**
6. **GROUND CABLE SHIELDS AT BOTH ENDS WITH MANUFACTURER'S GROUNDING KITS.**
7. **ROUTE GROUNDING CONDUCTORS ALONG THE SHORTEST AND STRAIGHTEST PATH POSSIBLE. BEND GROUNDING LEADS WITH A MINIMUM 8" RADIUS.**
8. **PRIOR TO INSTALLING LUGS ON GROUND WIRES, APPLY THOMAS & BETTS KOPR-SHIELD (TM OF JET LUBE, INC.) PRIOR TO BOLTING GROUND WIRE LUGS TO GROUND BARS, APPLY KOPR-SHIELD OR EQUAL.**
9. **PREPARE ALL BONDING SURFACES FOR GROUNDING CONNECTIONS BY REMOVING ALL PAINT AND CORROSION DOWN TO SHINY METAL. FOLLOWING CONNECTION, APPLY APPROPRIATE ANTI-OXIDIZATION PAINT.**

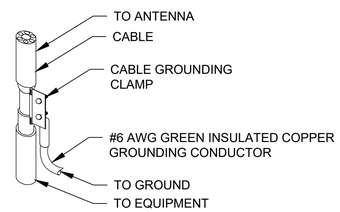

4 G-1 CABLE GROUNDING DETAIL
SCALE: N.T.S.

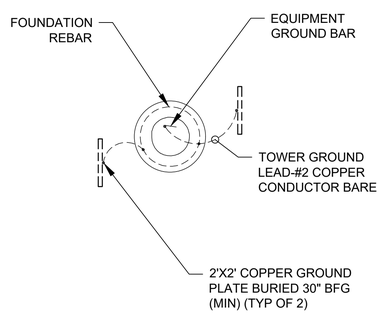

2 G-1 SITE GROUNDING DETAIL
SCALE: N.T.S.

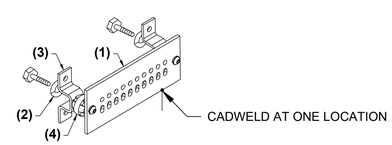

LEGEND

(1) **COPPER GROUND BAR, (PRE INSTALLED).**

(2) **5/8" LOCKWASHERS, STAINLESS STEEL.**

(3) **5/8" FLAT WASHERS, STAINLESS STEEL.**

(4) **INSULATORS**

5 G-1 GROUND BAR DETAIL
SCALE: N.T.S.

6 G-1 CADWELD DETAIL
SCALE: N.T.S.

SQF, LLC
16 MIDDLE ST, 4TH FLOOR
PORTLAND, ME 04101

PUBLIC WORKS CONSTRUCTION DOCUMENT

TOWN PROJECT NUMBER:
CD25-0059

PLANS PREPARED BY:

Kimley»Horn
6200 S SYRACUSE WAY. #300
GREENWOOD VILLAGE, CO 80111
PHONE (303) 228-2300
WWW.KIMLEY-HORN.COM

REV.	DATE	DESCRIPTION	BY
3	09/25/26	REVISED: POLE HEIGHT	WSG
2	12/16/25	REVISED:CITY COMMENTS	JAC
1	11/20/25	REVISED: CITY COMMENTS	WBB
0	09/02/25	100% FINAL CDs	SJB

DRAWN BY:	CHECKED BY:
SJB	XMJ

KHA PROJECT NUMBER:
296015001

TOWN APPROVAL BLOCK

TOWN OF CASTLE ROCK APPROVAL PLANS ARE HEREBY APPROVED FOR ONE YEAR FROM DATE OF DEVELOPMENT SERVICES APPROVAL

APPROVED BY:

DEVELOPMENT SERVICES

DATE

FOR REVIEW

PROJECT INFORMATION:

NODE NAME: DN2020BA_31LAB (DN1462)

1991 FOOTHILLS DR
CASTLE ROCK, CO 80109
DOUGLAS COUNTY

SHEET TITLE:
GROUNDING DETAILS

SHEET NUMBER:
G-1 (15 OF 16)

1 P-1 EXISTING CONDITIONS PHOTO
SCALE: N.T.S.

2 P-1 PROPOSED PHOTO SIMULATION
SCALE: N.T.S.

SQF, LLC

16 MIDDLE ST, 4TH FLOOR
PORTLAND, ME 04101

PUBLIC WORKS CONSTRUCTION DOCUMENT

TOWN PROJECT NUMBER:
CD25-0059

PLANS PREPARED BY:

Kimley»Horn

6200 S SYRACUSE WAY. #300
GREENWOOD VILLAGE, CO 80111
PHONE (303) 228-2300
WWW.KIMLEY-HORN.COM

REV.	DATE	DESCRIPTION	BY
3	09/25/26	REVISED: POLE HEIGHT	WSG
2	12/16/25	REVISED:CITY COMMENTS	JAC
1	11/20/25	REVISED: CITY COMMENTS	WBB
0	09/02/25	100% FINAL CDs	SJB

DRAWN BY:	CHECKED BY:
SJB	XMJ

KHA PROJECT NUMBER:
296015001

TOWN APPROVAL BLOCK

TOWN OF CASTLE ROCK APPROVAL PLANS ARE HEREBY APPROVED FOR ONE YEAR FROM DATE OF DEVELOPMENT SERVICES APPROVAL

APPROVED BY:

DEVELOPMENT SERVICES

DATE

FOR REVIEW

PROJECT INFORMATION:

NODE NAME: DN2020BA_31LAB
(DN1462)

1991 FOOTHILLS DR
CASTLE ROCK, CO 80109
DOUGLAS COUNTY

SHEET TITLE:

PHOTO
SIMULATION

SHEET NUMBER:

P-1 (16 OF 16)