CONSTRUCTION DOCUMENTS

SOUTH 10 FT. OF LOT 2 & ALL OF LOT 3, BLOCK 12, TOWN OF CASTLE ROCK (415 PERRY ST.)

LOCATED IN THE NORTHWEST QUARTER OF SECTION 11, TOWNSHIP 8 SOUTH, RANGE 67 WEST OF THE 6TH P.M.
TOWN OF CASTLE ROCK, COUNTY OF DOUGLAS, STATE OF COLORADO
TOWN OF CASTLE ROCK PROJECT NO. CD25-00XX

GENERAL NOTES

1. ALL MATERIALS, WORKMANSHIP, AND CONSTRUCTION OF PUBLIC IMPROVEMENTS SHALL MEET OR EXCEED THE STANDARDS AND SPECIFICATIONS SET FORTH IN THE TOWN OF CASTLE ROCK (TCR) MUNICIPAL CODE, TCR TECHNICAL MANUALS, AND APPLICABLE STATE AND FEDERAL REGULATIONS. WHERE THERE IS CONFLICT BETWEEN THESE PLANS AND THE TECHNICAL MANUAL OR ANY APPLICABLE STANDARDS, THE MORE STRINGENT STANDARD SHALL APPLY. ALL WORK SHALL BE INSPECTED AND APPROVED BY THE TCR CONSTRUCTION INSPECTOR.
2. THE CONTRACTOR IS SPECIFICALLY CAUTIONED THAT THE LOCATION AND/OR ELEVATION OF EXISTING UTILITIES AS SHOWN ON THESE PLANS IS BASED ON RECORDS OF THE VARIOUS UTILITY COMPANIES AND, WHERE POSSIBLE, MEASUREMENTS TAKEN IN THE FIELD. THE INFORMATION IS NOT TO BE RELIED UPON AS BEING EXACT OR COMPLETE.
3. THE CONTRACTOR MUST CALL THE LOCAL UTILITY LOCATION CENTER AT LEAST 72 HOURS BEFORE ANY EXCAVATION TO REQUEST EXACT FIELD LOCATIONS OF THE UTILITIES. PRIOR TO CONSTRUCTION, THE CONTRACTOR SHALL VERIFY PERTINENT LOCATIONS AND ELEVATIONS, ESPECIALLY AT CONNECTION POINTS AND AT POTENTIAL UTILITY CONFLICTS. IT SHALL BE THE RESPONSIBILITY OF THE CONTRACTOR TO RELOCATE ALL EXISTING UTILITIES THAT CONFLICT WITH THE PROPOSED IMPROVEMENTS SHOWN ON THESE PLANS.
4. THE CONTRACTOR SHALL COORDINATE AND COOPERATE WITH THE TOWN AND ALL UTILITY COMPANIES INVOLVED WITH REGARD TO RELOCATIONS OR ADJUSTMENTS OF EXISTING UTILITIES DURING CONSTRUCTION AND TO ASSURE THAT THE WORK IS ACCOMPLISHED IN A TIMELY FASHION AND WITH A MINIMUM DISRUPTION OF SERVICE. THE CONTRACTOR SHALL BE RESPONSIBLE FOR CONTACTING ALL PARTIES AFFECTED BY ANY DISRUPTION OF ANY UTILITY SERVICE.
5. CONTRACTOR SHALL PROVIDE A MINIMUM SEVENTY–TWO (72) HOURS NOTICE TO THE ON–SITE TCR CONSTRUCTION INSPECTOR, (720) 733–2200, PRIOR TO MAKING ANY CONNECTIONS/TIE–INS TO EXISTING WATER, SANITARY SEWER, AND/OR STORM SEWER SYSTEMS PROVIDED THAT THE UTILITY TIE–IN DOES NOT DISRUPT SERVICE TO EXISTING CR WATER CUSTOMERS. IF THE TIE–IN WILL DISRUPT UTILITY SERVICE, THEN CONTRACTOR SHALL PROVIDE A MINIMUM OF THREE (3) WEEKS NOTICE TO THE TCR CONSTRUCTION INSPECTOR TO ALLOW TIME FOR CR WATER TO PROVIDE WRITTEN NOTIFICATION TO EXISTING CUSTOMERS AFFECTED BY THE TIE–IN. ALL TOWN UTILITY TIE–INS MUST BE APPROVED BY CR WATER PRIOR TO COMMENCING WORK.
6. THE CONTRACTOR SHALL HAVE ONE (1) SIGNED COPY OF THE APPROVED PLANS, ONE (1) COPY OF THE APPROPRIATE CRITERIA AND SPECIFICATIONS, AND A COPY OF ANY PERMITS AND EXTENSION AGREEMENTS NEEDED FOR THE JOB ONSITE AT ALL TIMES.
7. THE CONTRACTOR SHALL BE RESPONSIBLE FOR ALL ASPECTS OF SAFETY INCLUDING, BUT NOT LIMITED TO, EXCAVATION, TRENCHING, SHORING, TRAFFIC CONTROL, AND SECURITY.
8. IF DURING THE CONSTRUCTION PROCESS CONDITIONS ARE ENCOUNTERED WHICH COULD INDICATE A SITUATION THAT IS NOT IDENTIFIED IN THE PLANS OR SPECIFICATIONS, THE CONTRACTOR SHALL CONTACT THE TCR CONSTRUCTION INSPECTOR IMMEDIATELY.
9. ALL REFERENCES TO ANY PUBLISHED STANDARDS SHALL REFER TO THE LATEST REVISION OF SAID STANDARD UNLESS SPECIFICALLY STATED OTHERWISE.
10. THE CONTRACTOR SHALL SUBMIT A TRAFFIC CONTROL PLAN IN ACCORDANCE WITH MUTCD TO THE APPROPRIATE RIGHT–OF–WAY AUTHORITY (TOWN, COUNTY OR STATE) FOR APPROVAL PRIOR TO ANY CONSTRUCTION ACTIVITIES WITHIN OR AFFECTING THE RIGHT–OF–WAY. THE CONTRACTOR SHALL BE RESPONSIBLE FOR PROVIDING ANY AND ALL TRAFFIC CONTROL DEVICES AS MAY BE REQUIRED BY THE CONSTRUCTION ACTIVITIES.
11. THE CONTRACTOR IS RESPONSIBLE FOR PROVIDING ALL LABOR AND MATERIALS NECESSARY FOR THE COMPLETION OF THE INTENDED IMPROVEMENTS SHOWN ON THESE DRAWINGS OR AS DESIGNATED TO BE PROVIDED, INSTALLED, OR CONSTRUCTED UNLESS SPECIFICALLY NOTED OTHERWISE.
12. THE CONTRACTOR SHALL BE RESPONSIBLE FOR RECORDING AS–BUILT INFORMATION ON A SET OF RECORD DRAWINGS KEPT ON THE CONSTRUCTION SITE AND AVAILABLE TO THE TCR CONSTRUCTION INSPECTOR AT ALL TIMES.
13. DIMENSIONS FOR LAYOUT AND CONSTRUCTION ARE NOT TO BE SCALED FROM ANY DRAWING. IF PERTINENT DIMENSIONS ARE NOT SHOWN, CONTACT THE CONSULTANT ENGINEER FOR CLARIFICATION AND ANNOTATE THE DIMENSION ON THE AS–BUILT RECORD DRAWINGS.
14. ALL INITIAL SEDIMENT CONTROL MEASURES SHALL BE INSTALLED PER THE TEMPORARY EROSION & SEDIMENT CONTROL (TESC) PLAN PRIOR TO ANY EARTH–DISTURBING ACTIVITY. ALL EROSION AND SEDIMENT CONTROL PRACTICES MUST BE MAINTAINED IN EFFECTIVE OPERATING CONDITION AT ALL TIMES. REMOVAL OF CONTROL MEASURES SHALL NOT OCCUR WITHOUT THE APPROVAL OF THE STORMWATER INSPECTOR. THE CONTRACTOR SHALL BE RESPONSIBLE FOR KEEPING ROADWAYS FREE AND CLEAR OF ALL CONSTRUCTION DEBRIS AND DIRT TRACKED FROM THE SITE. THE CONTRACTOR SHALL ALSO COMPLY WITH ALL TERMS AND CONDITIONS OF THE COLORADO CONSTRUCTION GENERAL PERMIT FOR STORMWATER DISCHARGES.
15. THE CONTRACTOR SHALL PROVIDE AN ACTION PLAN IMMEDIATELY FOLLOWING THE PRE–CONSTRUCTION MEETING DETAILING SUFFICIENT MEANS TO MITIGATE DUST ON SITE DURING OVERLOT GRADING, ROCK CRUSHING OR OTHER EARTHWORK ACTIVITIES. IF THE CONTRACTOR FAILS TO CONTROL DUST, ALL EARTH DISTURBING ACTIVITIES SHALL BE STOPPED UNTIL SUFFICIENT MEASURES ARE TAKEN TO THE TOWN'S SATISFACTION. THE CONTRACTOR SHALL ALSO COMPLY WITH ALL TERMS AND CONDITIONS OF THE COLORADO AIR QUALITY REGULATIONS FOR LAND DEVELOPMENT, AS REQUIRED.
16. THE CONTRACTOR SHALL SEQUENCE INSTALLATION OF UTILITIES IN SUCH A MANNER AS TO MINIMIZE POTENTIAL UTILITY CONFLICTS. IN GENERAL, STORM SEWER AND SANITARY SEWER SHOULD BE CONSTRUCTED PRIOR TO INSTALLATION OF THE WATER LINES AND DRY UTILITIES.
17. THERE SHALL BE NO SITE CONSTRUCTION ACTIVITIES ON SATURDAYS UNLESS SPECIFICALLY APPROVED BY THE TCR CONSTRUCTION INSPECTOR AND NO SITE CONSTRUCTION ACTIVITIES ON SUNDAYS OR HOLIDAYS UNLESS THERE IS PRIOR WRITTEN APPROVAL BY THE PUBLIC WORKS DIRECTOR.
18. NO SOLID OBJECT (EXCLUDING FIRE HYDRANTS AND TRAFFIC CONTROL DEVICES AND TRAFFIC SIGNS) EXCEEDING THIRTY (30) INCHES IN HEIGHT ABOVE THE FLOWLINE ELEVATION OF THE ADJACENT STREET, INCLUDING BUT NOT LIMITED TO BUILDINGS, UTILITY CABINETS, WALLS, FENCES, LANDSCAPE PLANTINGS, CROPS, CUT SLOPES, AND BERMS, SHALL BE PLACED WITHIN SIGHT DISTANCE LINES AND SIGHT DISTANCE EASEMENTS.
19. THIS PROPERTY IS LOCATED WITHIN ZONE X AS PER FEMA PANEL NO. 301 OF 495 OF MAP NUMBER 08035C0301G DATED MARCH 16, 2016. NO PORTIONS OF THE PROPERTY ARE LOCATED WITHIN A DESIGNATED 100–YEAR FLOODPLAIN ZONE A/AE.

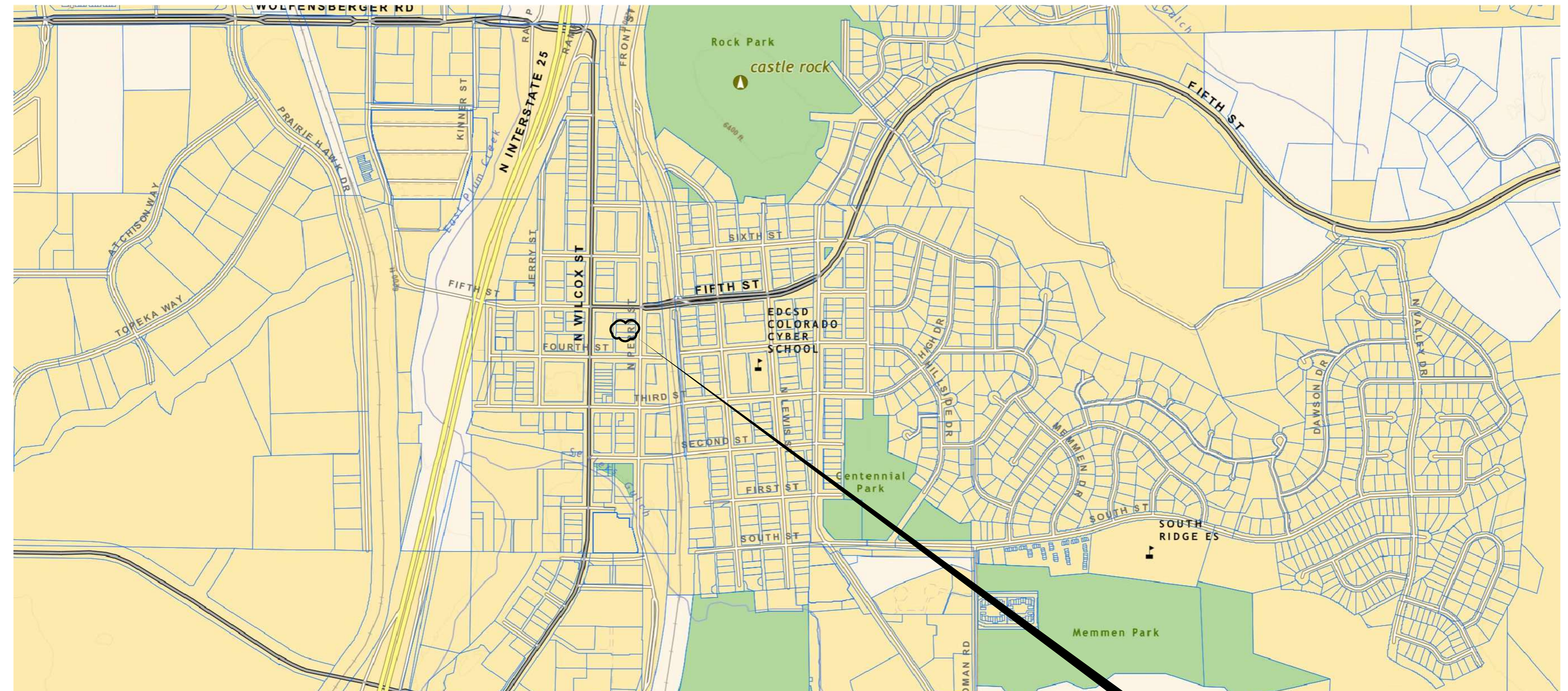

VICINITY MAP

N.T.S.

PROJECT LOCATION

NORTH

SHEET INDEX

T1 (1)	TITLE SHEET
GN1 (2)	GENERAL NOTES
DM1 (3)	DEMOLITION PLAN
SP1 (4)	OVERALL SITE PLAN
UT1 (5)	OVERALL UTILITY PLAN
GR1 (6)	OVERALL GRADING PLAN
GR2 (7)	DETAILED GRADING PLAN
GR3 (8)	DETAILED GRADING PLAN
DET1–DET4 (9–12)	CIVIL DETAILS
E1 (13)	PHOTOMETRIC PLAN
E2 (14)	LIGHTING CUT SHEETS
E3 (15)	LIGHTING CUT SHEETS
C0.0–C3.1 (16–20)	OLDCASTLE PERMEABLE PAVERS PACKAGE
LS1 (21)	LANDSCAPE NOTES & SCHEDULES
LS2 (22)	LANDSCAPE PLAN
LS3 (23)	LANDSCAPE DETAILS
IR1 (24)	IRRIGATION NOTES & SCHEDULE
IR2 (25)	IRRIGATION CHARTS
IR3 (26)	IRRIGATION PLAN
IR4–IR5 (27–29)	IRRIGATION DETAILS

29 TOTAL SHEETS

LEGEND

- PROPERTY LINE
- PR RETAINING WALL
- CURB HEIGHT TRANSITION ZONE
- EX REGIONAL STORM SEWER MAINLINE
- EX LOCAL STORM SEWER TO REMAIN
- PR. 6" PVC SOLID PIPE
- PR. 4" PVC SOLID PIPE
- PR. 6" PVC PERFORATED PIPE
- EX CURB & GUTTER
- W — W — EX WATER LINE
- S — S — EX SANITARY SEWER LINE
- X — EX FENCE LINE
- 5300 — PROPOSED MAJOR CONTOUR
- 5300 — PROPOSED MINOR CONTOUR
- 5300 — EXISTING MAJOR CONTOUR
- 5300 — EXISTING MINOR CONTOUR
- DRAINAGE SWALES
- DRAINAGE FLOW ARROWS
- LIMITS OF CONSTRUCTION
- EX STRUCTURES (TO REMAIN)
- PR BUILDING
- PR CONCRETE SIDEWALK/PARKING
- PR PERMEABLE PAVERS/HARDSCAPE
- PR COMPACTED CRUSHER FINE SURFACE
- PR STREETSCAPE AREA
- PR BUILDING DECK
- EX CONCRETE SIDEWALK

GENERAL NOTES (CONT.)

20. BENCHMARK: NAVD 1988 BASED ON THE DOUGLAS COUNTY CONTROL MONUMENT G23 (PID KK0194). ELEVATION 6231.61 FEET (NAVD 1988).

21. BASIS OF BEARINGS: BEARINGS ARE BASED ON THE WEST LINE OF N. PERRY ST. BETWEEN THE SOUTHEAST CORNER OF THE SUBJECT PROPERTY, BEING MONUMENTED BY A FOUND NAIL AND WASHER STAMPED "PLS 36570", AND THE NORTHEAST CORNER OF LOT 2, BEING MONUMENTED BY A FOUND REBAR WITH 1–1/4" RED PLASTIC CAP, STAMPING ILLEGIBLE. SAID LINE HAS AN ASSUMED BEARING OF NORTH 00°22'54" EAST.

KEY CONTACTS

TOWN OF CASTLE ROCK PUBLIC WORKS DEPT.
4175 CASTLETON CT. CASTLE ROCK, CO 80109
720.733.2462
ROADS@CRGOV.COM

CASTLE ROCK WATER – STORMWATER
175 KELLOGG CT. CASTLE ROCK, CO 80109
720.733.2235
STORMWATER@CRGOV.COM

BLACK HILLS ENERGY
350 INDIAN ST., STE: 400 GOLDEN, CO 80401
ATTN: RON AUROFF
303.568.3260

COMCAST CABLE SERVICES
6850 S. TUCSON WAY ENGLEWOOD, CO 80112
ATTN: KEVIN SONKA
303.603.5605

I.R.E.A.
P.O. BOX 495 SEDALIA, CO 80135
ATTN: LAND USE DEPARTMENT
303.688.3100

CENTURY LINK
9750 E. COSTILLA AVE. ENGLEWOOD, CO 80112
303.792.1840

OWNER REPRESENTATIVE
WHITE DEVELOPMENT
PO BOX 178, DENVER, CO 80203
DEVIN VISCIANO 303.506.5995
DVISCIANO@WHITE–DEV.COM

CONTRACTOR
RB CONTRACTORS, LLC
C/O DEVIN VISCIANO
PO BOX 178, DENVER, CO 80203
DEVIN VISCIANO 303.506.5995
DVISCIANO@WHITE–DEV.COM

ENGINEER
STEPHEN DOUGLAS, P.E. 720.388.8126
PERSONALIZED ENGINEERING SOLUTIONS, LLC SDOUGLAS@PENGSOLUTIONS.COM
9249 S. BROADWAY #200–388, HIGHLANDS RANCH CO 80129

SURVEYOR
BASIL MICAH HANSON, P.L.S. 303.753.6730
R&R ENGINEERS–SURVEYORS, INC. BHANSON@RRENGINEERS.COM
1635 W. 13TH AVE. STE. 310, DENVER, CO 80204

LANDSCAPE
STEVE CARNES, PLA 303.892.1166
NORRIS DESIGN SCARNES@NORRIS–DESIGN.COM
1101 BANNOCK ST. DENVER, CO 80204

ARCHITECT
CHAD MITCHELL, AIA 303.550.2231
MERIDIAN 105 ARCHITECTURE CMITCHELL@MERIDIAN105.COM
6030 SMITH ROAD, DENVER, CO 80216

UTILITY NOTIFICATION
UTILITY NOTIFICATION CENTER OF COLORADO 800.922.1987

INDEMNIFICATION AND ADHERENCE TO STANDARDS STATEMENTS

THESE PLANS HAVE BEEN REVIEWED BY THE TOWN OF CASTLE ROCK FOR CONCEPT ONLY. THE REVIEW DOES NOT IMPLY RESPONSIBILITY BY THE REVIEWING DEPARTMENT, THE TOWN ENGINEER, OR THE TOWN OF CASTLE ROCK FOR ACCURACY AND CORRECTNESS OF THE CALCULATIONS. FURTHERMORE, THE REVIEW DOES NOT IMPLY THAT QUANTITIES OF ITEMS ON THE PLANS ARE THE FINAL QUANTITIES REQUIRED. THE REVIEW SHALL NOT BE CONSTRUED FOR ANY REASON AS ACCEPTANCE OF FINANCIAL RESPONSIBILITY BY THE TOWN FOR ADDITIONAL QUANTITIES OF ITEMS SHOWN THAT MAY BE REQUIRED DURING THE CONSTRUCTION PHASE. ALL WORK SHALL BE CONSTRUCTED IN ACCORDANCE WITH THE TOWN OF CASTLE ROCK MUNICIPAL CODE, TECHNICAL MANUALS AND/OR OTHER TOWN–APPROVED APPLICABLE STANDARDS.

PROFESSIONAL ENGINEER CERTIFICATION

I HEREBY AFFIRM THAT THESE FINAL CONSTRUCTION PLANS WERE PREPARED UNDER MY DIRECT SUPERVISION, IN ACCORDANCE WITH ALL APPLICABLE TOWN OF CASTLE ROCK AND STATE OF COLORADO STANDARDS AND STATUTES, RESPECTIVELY; AND THAT I AM FULLY RESPONSIBLE FOR ALL DESIGN AND REVISIONS RELATIVE TO SAID PLANS.

STEPHEN M. DOUGLAS, P.E.
REGISTERED LICENSED PROFESSIONAL ENGINEER
STATE OF COLORADO No. 41176
FOR AND ON BEHALF OF
PERSONALIZED ENGINEERING SOLUTIONS, LLC
(720)388–8126

TOWN OF CASTLE ROCK APPROVAL
PLANS ARE HEREBY APPROVED FOR ONE YEAR FROM DATE OF DEVELOPMENT SERVICES APPROVAL

APPROVED BY:

DEVELOPMENT SERVICES

UNCC
CALL BEFORE YOU DIG
811
OR
1-800-922-1987
Utility Notification Center of Colorado
Administrative Office 303–232–1991
16361 Table Mountain Parkway
Golden, Co. 80403

CALL 2 BUSINESS DAYS IN ADVANCE BEFORE YOU DIG, GRADE OR EXCAVATE FOR THE MARKING OF UNDERGROUND MEMBER UTILITIES.

PERSONALIZED ENGINEERING SOLUTIONS, LLC ASSUMES NO RESPONSIBILITY FOR EXISTING UTILITY LOCATIONS (HORIZONTAL AND VERTICAL). THE EXISTING UTILITIES SHOWN ON THIS DRAWING HAVE BEEN PLOTTED FROM THE BEST AVAILABLE INFORMATION. IT IS, HOWEVER, THE RESPONSIBILITY OF THE CONTRACTOR TO FIELD VERIFY THE LOCATIONS OF ALL UTILITIES PRIOR TO THE COMMENCEMENT OF ANY CONSTRUCTION ACTIVITIES.

FIELD CHANGE ORDER TABLE:

FCO#	DATE	PURPOSE/DESCRIPTION

PATH: PATH P:\WHITE DEV CITY HOTEL\CADD\CIVIL\CD\01-T1_CD.DWG
PLOTTED BY: S. DOUGLAS PLOT DATE: 3/14/2025 12:50 PM
XREFS:

DATE	REVISION DESCRIPTION
MAR 14 2025	INITIAL CIVIL CD SUBMITTAL

CITY HOTEL
M1A — 6030 SMITH ROAD DENVER, CO 80216 MERIDIAN 105 ARCHITECTURE

Drawing Name: 01-T1_CD.dwg
Job Number: CITY HOTEL
Prepared For: WHITE DEVELOPMENT
Designer: SMD | Drafter: SN | Checked: SMD

Personalized Engineering Solutions
Personalized Engineering Solutions, LLC
9249 S. Broadway #200-388
Highlands Ranch, CO 80129 720.388.8126
www.pengsolutions.com
Construction Management Civil Engineering Land Planning

CITY HOTEL, CASTLE ROCK
CONSTRUCTION DOCUMENTS
TITLE SHEET

Sheet T1

Date MARCH 2025

STREET CONSTRUCTION NOTES

1. ALL STREET CONSTRUCTION IS SUBJECT TO THE GENERAL NOTES ON THE COVER SHEET OF THESE PLANS AS WELL AS THE STREET CONSTRUCTION NOTES LISTED HERE.
2. A PAVING SECTION DESIGN, SIGNED AND SEALED BY A COLORADO REGISTERED PROFESSIONAL ENGINEER, MUST BE SUBMITTED TO THE TCR PUBLIC WORKS DEPARTMENT FOR APPROVAL PRIOR TO ANY STREET CONSTRUCTION ACTIVITY (FULL–DEPTH ASPHALT SECTIONS ARE NOT PERMITTED AT A DEPTH GREATER THAN 8" ASPHALT). THE JOB MIX SHALL BE SUBMITTED FOR APPROVAL PRIOR TO PLACEMENT OF ANY ASPHALT.
3. WHERE PROPOSED PAVING ADJOINS EXISTING ASPHALT, THE EXISTING ASPHALT SHALL BE SAW CUT A MINIMUM DISTANCE OF 12" FROM THE EXISTING EDGE TO CREATE A CLEAN CONSTRUCTION JOINT. THE DEVELOPER SHALL BE REQUIRED TO REMOVE EXISTING PAVEMENT TO A DISTANCE WHERE A CLEAN CONSTRUCTION JOINT CAN BE MADE.
4. STREET SUBGRADES SHALL BE SCARIFIED TO A MINIMUM DEPTH OF 12" AND RE–COMPACTED PRIOR TO SUB–BASE INSTALLATION. NO BASE MATERIAL SHALL BE LAID UNTIL THE SUBGRADE HAS BEEN INSPECTED AND APPROVED BY THE TCR CONSTRUCTION INSPECTOR.
5. VALVE BOXES ARE TO BE BROUGHT UP TO GRADE AT THE TIME OF PAVEMENT PLACEMENT OR OVERLAY. VALVE BOX ADJUSTING RINGS ARE NOT ALLOWED.

SIGNAGE AND STRIPING NOTES

1. ALL SIGNAGE AND STRIPING IS SUBJECT TO THE GENERAL NOTES ON THE COVER SHEET OF THESE PLANS AS WELL AS THE SIGNAGE AND STRIPING NOTES LISTED HERE.
2. ALL PAINT SHALL BE 15 MIL THICK UPON INSTALLATION AND 8 MIL THICK WHEN DRY.
3. ALL PERMANENT LONGITUDINAL PAVEMENT STRIPING ON ASPHALT SURFACES (CENTERLINES, LANE LINES, BAY LINES, ETC.) SHALL BE INSTALLED USING AN APPROVED REFLECTIVE TRAFFIC PAINT OR PAVEMENT MARKING TAPE. REFLECTIVE BEADS SHALL BE APPLIED IN ACCORDANCE WITH CDOT'S STANDARD SPECIFICATIONS FOR ROAD AND BRIDGE CONSTRUCTION AND THE MANUFACTURER'S REQUIREMENTS. WHEN TAPE IS USED ON AN ASPHALT STREET, IT SHALL BE "ROLLED" INTO THE FINAL LIFT. ON CONCRETE SURFACES TAPE SHALL BE UTILIZED WITH A CONTRASTING BLACK EDGE AND GROOVED INTO THE PAVEMENT.
4. THERMO–PLASTIC APPLICATIONS SHALL BE AS SPECIFIED IN THE PLANS AND/OR PER TOWN CRITERIA.
5. ALL SURFACES THAT ACCEPT PAINT/THERMO–PLASTIC STRIPING OR PRE–FORMED MARKINGS SHALL BE FIRST SANDBLASTED AND THOROUGHLY CLEANED PRIOR TO INSTALLATION OF STRIPING OR MARKINGS.
6. ALL ARROW MARKINGS SHALL BE PRE–FORMED TAPE, THERMO–PLASTIC OR EPOXY–PAINTED.
7. STOP BARS SHALL BE 90 MIL THERMO–PLASTIC.
8. ALL ROADWAY SIGNAGE SHALL CONFORM TO THE MUTCD AND/OR THE TOWN'S CRITERIA.
9. ALL SIGNPOSTS SHALL UTILIZE BREAKAWAYASSEMBLIES AND FASTENERS, PER THE TCR STANDARD DETAIL.

FIRE NOTES

1. IT IS THE RESPONSIBILITY OF THE PROPERTY OWNER TO MAINTAIN DRIVE LANES FOR EMERGENCY VEHICLE INGRESS AND EGRESS, INCLUDING SNOW REMOVAL.
2. EMERGENCY VEHICLE ACCESS ROAD IS REQUIRED TO ALLOW ACCESS WITHIN 150' OF ALL EXTERIOR OF THE BUILDING BY AN APPROVED ROUTE.
3. FIRE APPARATUS ACCESS ROADS SHALL BE DESIGNED AND MAINTAINED TO SUPPORT THE IMPOSED LOADS OF FIRES APPARATUS AND SHALL BE PROVIDED WITH A SURFACE SO AS TO PROVIDE ALL–WEATHER DRIVING CAPABILITIES. ACCESS ROAD SHALL BE EITHER CONCRETE, ASPHALT, OR OTHER APPROVED ALTERNATIVE MATERIAL ACCOMPANIED WITH AN ENGINEER'S STAMP STATING THE MATERIAL WILL SUPPORT A 75,000 POUND IMPOSED LOAD.
4. FIRE FIRE HYDRANT(S) ARE REQUIRED TO BE INSTALLED AND MADE SERVICEABLE PRIOR TO COMBUSTIBLE MATERIALS BEING BROUGHT ONTO THE SITE AND DURING THE TIME OF VERTICAL CONSTRUCTION.
5. "NO PARKING FIRE LANE" SIGNS ARE REQUIRED IN AREAS THAT MEET THE FOLLOWING CRITERIA AND IN AREAS DESIGNATED BY THE FIRE PREVENTION BUREAU. SIGNS SHALL BE POSTED ON BOTH SIDES OF FIRE DEPARTMENT ACCESS ROADWAYS, PUBLIC OR PRIVATE ROADWAYS AND DRIVEWAYS LESS THAN 26 FEET WIDE. SIGNS SHALL BE POSTED ON ONE SIDE ONLY OF FIRE DEPARTMENT ACCESS ROADWAYS, PUBLIC OR PRIVATE ROADWAYS OR DRIVEWAYS BETWEEN 26 FEET WIDE AND 32 FEET WIDE. NO SIGNAGE IS REQUIRED FOR ACCESS ROADWAY FIRE DEPARTMENT ACCESS ROADWAYS, PUBLIC OR PRIVATE ROADWAYS OR DRIVEWAYS EXCEEDING 32 FEET WIDE.
6. WHEN FIRE APPARATUS ACCESS ROADS OR A WATER SUPPLY FOR FIRE PROTECTION IS REQUIRED TO BE INSTALLED, SUCH PROTECTION SHALL BE INSTALLED AND MADE SERVICEABLE PRIOR TO COMBUSTIBLE MATERIALS BEING BROUGHT ONTO THE SITE AND THE BUILDING CONSTRUCTION GOING VERTICAL.
7. TRACER WIRE SHALL BE INSTALLED ON ALL FIRE SERVICE LINES AND AT ALL FIRE HYDRANTS. REFER TO TOWN OF CASTLE ROCK STANDARD DETAILS, THE WATER LINE CONSTRUCTION NOTES, AND THE TRACER WIRE INSTALLATION NOTES LISTED HEREIN.

811

UNCC
CALL BEFORE
YOU DIG
811
OR
1-800-922-1987

Utility Notification
Center of Colorado
Administrative Office 303–232–1991
16361 Table Mountain Parkway
Golden, Co. 80403

CALL 2 BUSINESS DAYS IN ADVANCE BEFORE YOU DIG, GRADE OR EXCAVATE FOR THE MARKING OF UNDERGROUND MEMBER UTILITIES.

PERSONALIZED ENGINEERING SOLUTIONS, LLC ASSUMES NO RESPONSIBILITY FOR EXISTING UTILITY LOCATIONS (HORIZONTAL AND VERTICAL). THE EXISTING UTILITIES SHOWN ON THIS DRAWING HAVE BEEN PLOTTED FROM THE BEST AVAILABLE INFORMATION. IT IS, HOWEVER, THE RESPONSIBILITY OF THE CONTRACTOR TO FIELD VERIFY THE LOCATIONS OF ALL UTILITIES PRIOR TO THE COMMENCEMENT OF ANY CONSTRUCTION ACTIVITIES.

WATER LINE CONSTRUCTION NOTES

1. ALL WATER LINE CONSTRUCTION IS SUBJECT TO THE GENERAL NOTES ON THE COVER SHEET OF THESE PLANS AS WELL AS THE WATER LINE CONSTRUCTION NOTES LISTED HEREIN.
2. ALL WATER LINES SHALL BE: 1) DUCTILE IRON PIPE (DIP), CONFORMING TO THE REQUIREMENTS OF AWWA C150, CL350 (6"–12"), CL250 (16"AND 20"), CL200 (>24"), WITH PUSH–ON GASKETED JOINTS OR MECHANICAL JOINT ENDS, IN CONFORMANCE WITH AWWA C111. PIPE SHALL BE CEMENT–LINED IN ACCORDANCE WITH AWWA C104, AND AN EXTERIOR COATING IN ACCORDANCE WITH C151; OR 2) PVC PIPE, CONFORMING TO AWWA C900 FOR PIPE SIZES 8" AND 12", CL305 (DR14) AND AWWA C905 FOR PIPE SIZE OF 16", CL235 (DR18). MINIMUM DISTRIBUTION MAIN SIZE SHALL BE 8". WATER LINES THAT ARE 10", 14", AND 18" IN DIAMETER ARE NOT PERMITTED.
3. WATER LINE FITTINGS SHALL BE DIP CONFORMING TO AWWA C153 OR C110 AND SHALL HAVE A PRESSURE RATING NOT LESS THAN THE PIPE. ALL FITTINGS SHALL BE MECHANICAL JOINT, UNLESS APPROVED BY CASTLE ROCK WATER.
4. ALL DIP AND FITTINGS SHALL BE ENCASED IN POLYETHYLENE TO PREVENT CORROSION. POLYETHYLENE WRAP, TAPE AND INSTALLATION SHALL MEET THE REQUIREMENTS OF AWWA C105.
5. GATE VALVES SHALL BE DESIGNED AND MANUFACTURED IN ACCORDANCE WITH AWWA C509–1 AND AWWA C515–01, AS APPROPRIATE, AND SHALL BE DUCTILE IRON BODY AND BONNET, RESILIENT–SEATED WEDGE GATE, NON–RISING STEM TYPE, O–RING SEALS, AND SLIP–ON CONNECTIONS (TAPPING VALVES, WHERE ALLOWED, SHALL BE FLANGE X MJ). VALVE ENDS SHALL BE MECHANICAL JOINT, UNLESS OTHERWISE SPECIFIED IN THE PLANS. THE VALVES SHALL BE SUITABLE FOR A WORKING PRESSURE OF 200 PSI. THEY SHALL BE CLOSED BY TURNING CLOCKWISE AND SHALL HAVE TWO–INCH SQUARE CAST IRON OPERATING NUTS WITH AN ARROW CAST IN THE NUT INDICATING THE DIRECTION OF OPENING. VALVES SHALL BE POLYETHYLENE WRAPPED IN ACCORDANCE WITH AWWA C105. THEY SHALL BE OF SUCH DESIGN AS TO MAINTAIN THE FULL AREA OF THE PIPE THROUGH THE VALVE WHEN OPEN AND SHALL BE DESIGNED TO TAKE FULL PRESSURE ON EITHER FACE. VALVE SHALL HAVE TYPE 304 STAINLESS STEEL BONNET BOLTS AND NUTS AND TYPE 304 STAINLESS STEEL O–RING GLAND BOLTS AND NUTS. VALVES SHALL BE MANUFACTURED BY AMERICAN FLOW CONTROL, KENNEDY OR MUELLER AND SHALL HAVE THE MANUFACTURER'S NAME OR INITIALS AND THE PRESSURE RATING CAST ON THE BODY.
6. ALL FIRE HYDRANTS SHALL BE "PACER WB67–250" BY WATEROUS CO. OR "SUPER CENTURION 250" BY MUELLER CO., OPENING TO THE LEFT. REFER TO TCR STANDARD DETAILW–11.
7. ALL WATER LINES SHALL BE BURIED AN ABSOLUTE MINIMUM OF 5 FEET FROM FINAL GRADE TO THE TOP OF THE WATER MAIN. THE MAXIMUM BURY DEPTH SHALL BE 6 FEET, UNLESS ADDITIONAL DEPTH IS REQUIRED FOR UTILITY CROSSINGS OR OTHER CONFLICTS. WHEREVER SUCH CROSSINGS OR CONFLICTS OCCUR, THE TCR STANDARD DETAIL W–17 SHALL BE USED.
8. ALL WATER LINES SHALL BE BEDDED IN ACCORDANCE WITH TCR STANDARD DETAIL W–21.
9. CONTRACTOR SHALL MAINTAIN A MINIMUM 18–INCH VERTICAL CLEARANCE AND 10–FOOT HORIZONTAL CLEARANCE EDGE–TO–EDGE BETWEEN ALL WATER LINES AND ANY OTHER PIPED UTILITIES.
10. ALL BENDS, TEES, FIRE HYDRANTS AND PLUGS AT DEAD–END MAINS SHALL BE RESTRAINED FROM THRUST BY USING MEGALUG RESTRAINTS PER TCR STANDARD DETAIL W–18 IN COMBINATION WITH CONCRETE THRUST BLOCKS PER TCR STANDARD DETAIL W–22.
11. CONTRACTOR SHALL BE RESPONSIBLE FOR ADJUSTING ALL FIRE HYDRANTS AND VALVE BOXES TO FINISH GRADE IN ACCORDANCE WITH TCR STANDARD DETAILS W–10 AND W–11.
12. PRIOR TO CONNECTING TO THE TOWN'S EXISTING WATER SYSTEM, ALL NEW WATERLINES AND/OR SEGMENTS OF WATERLINES SHALL BE DISINFECTED, PRESSURE TESTED, AND BACTERIOLOGICALLY TESTED IN ACCORDANCE WITH SECTION 450.5 OF THE TOWN OF CASTLE ROCK CONSTRUCTION METHODOLOGY AND MATERIALS MANUAL; AWWA C651–14 AND C600–5.2; AND DETAILS W–35A AND/OR W–35B. PLEASE NOTE THAT THIS DISINFECTION AND TESTING WILL BE PERFORMED WHILE THE NEW WATERLINES AND/OR SEGMENTS OF WATERLINES ARE NOT PHYSICALLY CONNECTED TO THE TOWN'S EXISTING WATER SYSTEM. TOWN AND CONTRACTOR SHALL FURNISH MATERIALS AS SHOWN ON DETAILS W–35A AND/OR W–35B. CONTRACTOR SHALL PERFORM ALL PROCEDURES FOR TESTING, FLUSHING AND DISINFECTING OF ALL WATER LINES. TESTING SHALL BE DONE IN THE PRESENCE OF THE TCR CONSTRUCTION INSPECTOR. CONTRACTOR SHALL PROVIDE A MINIMUM SEVENTY–TWO (72) HOUR NOTICE TO, AND OBTAIN APPROVAL FROM THE ON–SITE TCR CONSTRUCTION INSPECTOR, (720)733– 2200, PRIOR TO DISINFECTION, PRESSURE TESTING, AND BACTERIOLOGICAL TESTING OF ANY NEW WATERLINES AND/OR SEGMENTS OF WATERLINES.
13. DISTANCES FOR WATER LINES ARE HORIZONTAL DISTANCE FROM THE CENTER OF THE FITTING TO CENTER OF THE FITTING. THEREFORE, DISTANCES SHOWN ON THE PLANS ARE APPROXIMATE AND COULD VARY DUE TO VERTICAL ALIGNMENT AND FITTING DIMENSIONS.
14. ALL DOMESTIC WATER SERVICE LINES SHALL BE TYPE K COPPER INSULATED WITH POLYWRAP, FROM THE MAIN TO THE METER. THE WATER METER SHALL BE SUPPLIED BY THE TOWN AND INSTALLED BY THE CONTRACTOR. THE WATER METER WILL BE AVAILABLE FOR PICK UP AT CASTLE ROCK WATER. THE INDIVIDUAL PICKING UP THE WATER METER MUST HAVE PROOF OF A PERMIT AND MUST HAVE PAID ALL FEES ASSOCIATED WITH THE WATER METER.
15. WATER LINE TRENCHES SHALL BE SLOPED OR BRACED AND SHEETED AS NECESSARY FOR THE SAFETY OF THE WORKERS AND THE PROTECTION OF OTHER UTILITIES, IN COMPLIANCE WITH ALL APPLICABLE STATE AND FEDERAL REQUIREMENTS. FOR ALL EXCAVATION OPERATIONS, SAFETY IS THE RESPONSIBILITYOF THE CONTRACTOR.
16. WATER LINES SHALL BE ALIGNED 6 FEET OFF THE NORTH AND EAST GUTTER FLOW LINES OF PUBLIC STREETS WHEREVER POSSIBLE. SEE DETAIL W–13.
17. WHERE WATER LINE IMPROVEMENTS ARE DIFFICULT TO LOCATE ON THE SURFACE, THE CONTRACTOR SHALL BE REQUIRED TO INSTALL PERMANENT WATER LINE MARKERS, IN ACCORDANCE WITH TCR STANDARD DETAIL W–23, OR AT THE DISCRETION OF THE TCR CONSTRUCTION INSPECTOR.
18. TRACER WIRE SHALL BE USED ON ALL DIP AND PVC WATER MAINS, AND WARNING TAPE SHALL BE PLACED 1 FOOT ABOVE ALL DIP AND PVC PIPE. REFER TO TOWN OF CASTLE ROCK STANDARD TRACER WIRE REQUIREMENTS, IN THESE GENERAL NOTES. TEST STATIONS SHALL BE CONSTRUCTED PER STANDARD DETAIL W–28.
19. THE MINIMUM DISTANCE BETWEEN TEES, CROSSES, VALVES, AND BENDS SHALL BE 10 FEET WHEREVER POSSIBLE.
20. MAXIMUM DEFLECTION FOR WATER MAINS SHALL NOT EXCEED ONE–HALF OF THE MANUFACTURER'S MAXIMUM ALLOWABLE DEFLECTION OR
    2.5 DEGREES, WHICHEVER IS LESS.
21. ALL RESIDENTIAL WATER SERVICE LINES SHALL BE CONSTRUCTED PERPENDICULAR TO THE FRONT PROPERTY LINE IN CONFORMANCE WITH THE TOWN OF CASTLE ROCK WATER SYSTEM DESIGN CRITERIA MANUAL AND WATER DETAILS.
22. THE MAXIMUM DEFLECTION OF DOMESTIC WATER SERVICE LINES AND IRRIGATION LINES SHALL NOT EXCEED THE MANUFACTURER'S MAXIMUM ALLOWABLE DEFLECTION.
23. THE SIZE OF THE IRRIGATION TAP, LINE, METER AND BACKFLOW PREVENTION ASSEMBLYSHALL BE THE SAME TO A MINIMUM DISTANCE OF 10 PIPE DIAMETERS PAST THE WINTERIZATION TEE.
24. THE MINIMUM HORIZONTAL SEPARATION BETWEEN UTILITY LINES CARRYING THE SAME MATERIAL (E.G., WATER AND WATER) SHALL BE 5 FEET.
25. WHEN INSTALLING CUT IN TEES OR OTHER APPURTENANCES ON/IN AN EXISTING WATER LINE, THE PIPE MATERIAL BETWEEN THE EXISTING WATER LINE AND THE CUT IN TEE OR OTHER APPURTENANCE SHALL REMAIN CONSISTENT.
26. CONTRACTOR IS RESPONSIBLE TO PROVIDE BACKFLOW PREVENTION DOWNSTREAM OF THE METER. ACCEPTABLE BACKFLOW PREVENTION ASSEMBLIES ARE ASFOLLOWS:

- COMMERCIAL POTABLE WATER SERVICE: REDUCED PRESSURE ASSEMBLY.
- RESIDENTIAL POTABLE WATER SERVICE: DOUBLE CHECK VALVE ASSEMBLY, REDUCED PRESSURE ASSEMBLY.
- COMMERCIAL FIRE SERVICE: REDUCED PRESSURE DETECTOR ASSEMBLY, DOUBLE CHECK VALVE DETECTOR ASSEMBLY.
- RESIDENTIAL FIRE SERVICE: REDUCED PRESSURE DETECTOR ASSEMBLY, DOUBLE CHECK VALVE DETECTOR ASSEMBLY.
- COMMERCIAL AND MULTIFAMILY IRRIGATION WATER SERVICE: REDUCED PRESSURE ASSEMBLY.

THE DOUBLE CHECK DETECTOR ASSEMBLY (DCDA) IS THE ONLY BACK FLOW PREVENTION DEVICE RATED FOR HORIZONTAL OR VERTICAL INSTALLATION.

STORM DRAINAGE CONSTRUCTION NOTES

1. ALL STORM DRAINAGE CONSTRUCTION IS SUBJECT TO THE GENERAL NOTES ON THE COVER SHEET OF THESE PLANS AS WELL AS THE STORM DRAINAGE CONSTRUCTION NOTES LISTED HERE.
2. ALL STORM DRAINAGE PIPES SHALL BE REINFORCED CONCRETE PIPE (RCP) PER ASTM C76, CL III INSTALLED WITH FLEXIBLE PLASTIC (BITUMEN) GASKETS, ACCORDING TO THE MANUFACTURER'S INSTALLATION GUIDELINES. ANY STORM DRAINAGE PIPE UNDER A PROPOSED OR FUTURE TRAFFIC AREA SHALL BE RCP CL III AS A MINIMUM. RCP TO BE JACKED SHALL BE CL–V AS A MINIMUM.
3. ALL STORM DRAINAGE PIPES SHALL HAVE A MINIMUM COVER OF 24" UNLESS LOAD CALCULATIONS ARE PROVIDED. UNDER NO CIRCUMSTANCES WILL ANY PIPE HAVE LESS THAN 18" COVER FROM THE FINISH SURFACE TO THE OUTSIDE WALL OF THE PIPE.
4. ALL STORM DRAINAGE PIPES SHALL BE BEDDED IN ACCORDANCE WITH TCR STANDARD DETAIL SD–2.
5. ALL STORM DRAINAGE TRENCHES SHALL BE SLOPED OR BRACED AND SHEETED AS NECESSARY FOR THE SAFETY OF THE WORKERS AND THE PROTECTION OF OTHER UTILITIES AND IN COMPLIANCE WITH ALL APPLICABLE STATE AND FEDERAL REQUIREMENTS. ALL EXCAVATION OPERATION SAFETY IS THE RESPONSIBILITY OF THECONTRACTOR.
6. ALL MANHOLE RIM ELEVATIONS GIVEN ON THESE PLANS ARE TO BE CONSIDERED APPROXIMATE. THE CONTRACTOR SHALL SET THE FINAL RIM ELEVATION BASED ON THE COMPLETED FINISHSURFACE.
7. ALL STORM DRAINAGE PIPES SHALL HAVE A MINIMUM HORIZONTAL SEPARATION OF 10' FROM ALL WATER LINES. WHERE LINES CROSS, THERE SHALL BE A MINIMUM OF 18" CLEAR VERTICAL SEPARATION.
8. ALL INLETS AND MANHOLES SHALL BE PLACED ON A MINIMUM OF 1' OF ¾" WASH ROCK. IF ADDITIONAL SUBGRADE IS DISTURBED, EXCAVATION SHALL BE BACKFILLED WITH ¾" WASH ROCK OR OTHER APPROVED STRUCTURAL SOIL COMPACTED TO 95% OF ASTM D698 UNLESS OTHERWISE INSTRUCTED BY THE INSPECTOR.

SANITARY SEWER CONSTRUCTION NOTES

1. ALL SANITARY SEWER CONSTRUCTION IS SUBJECT TO THE GENERAL NOTES ON THE COVER SHEET OF THESE PLANS AS WELL AS THE SANITARY SEWER CONSTRUCTION NOTES LISTED HEREIN.
2. ALL SANITARY SEWER PIPELINES SHALL BE PVC, SDR–35, IN ACCORDANCE WITH ASTM D–3034, BELL AND SPIGOT WITH ELASTOMERIC SEAL.
3. ALL SANITARY SEWER PIPELINES SHALL HAVE A MINIMUM COVER OF 5 FEET AND MAXIMUM COVER OF 20 FEET.
4. ALL SANITARY SEWER PIPELINES SHALL BE BEDDED IN ACCORDANCE WITH TCR STANDARD DETAIL SS–8.
5. ALL MANHOLE RIM ELEVATIONS GIVEN ON THESE PLANS ARE CONSIDERED APPROXIMATE. THE CONTRACTOR SHALL SET THE FINAL RIM ELEVATION BASED ON THE COMPLETE FINISH SURFACE AND PER TCR STANDARD DETAIL SS–3.
6. SANITARY SEWER PIPELINE SHALL BE ALIGNED 6 FEET OFF THE SOUTH AND WEST GUTTER FLOW LINES OF PUBLIC STREETS WHEREVER POSSIBLE.
7. ALL SEWER LINES SHALL HAVE A MINIMUM HORIZONTAL SEPARATION OF 10 FEET EDGE–TO–EDGE FROM ALL WATER LINES. WHERE LINES CROSS, THERE SHALL BE A MINIMUM OF 18" CLEAR VERTICAL SEPARATION.
8. ALL SANITARY SEWER LINES MUST BE TESTED IN ACCORDANCE WITH SECTION 450.6 OF THE TOWN OF CASTLE ROCK CONSTRUCTION METHODOLOGY AND MATERIALS MANUAL IN THE PRESENCE OF A TCR CONSTRUCTION INSPECTOR.
9. ALL SANITARY SEWER LINE TRENCHES SHALL BE SLOPED OR BRACED AND SHEETED AS NECESSARY FOR THE SAFETY OF THE WORKERS AND THE PROTECTION OF OTHER UTILITIES, IN COMPLIANCE WITH ALL APPLICABLE STATE AND FEDERAL REQUIREMENTS. ALL EXCAVATION OPERATION SAFETY IS THE RESPONSIBILITY OF THE CONTRACTOR.
10. SANITARY SEWER SERVICES SHALL BE CONNECTED A MINIMUM OF 5 FEET OUTSIDE OF MANHOLES WITH A WYE CONNECTION IN ACCORDANCE WITH TCR STANDARD DETAIL SS–2.
11. MINIMUM COVER FOR SANITARY SEWER SERVICE LINES SHALL BE 5 FEET AND THE MINIMUM SLOPE SHALL BE 2.0%.
12. ALL SANITARY SEWER SERVICE LINES SHALL BE CONSTRUCTED ALONG THE SHORTEST AND STRAIGHTEST ROUTE POSSIBLE IN CONFORMANCE WITH THE TOWN OF CASTLE ROCK WASTEWATER SYSTEM DESIGN CRITERIA MANUAL.
13. THE MINIMUM HORIZONTAL SEPARATION BETWEEN UTILITY LINES CARRYING THE SAME MATERIAL (E.G., WASTEWATER AND WASTEWATER) SHALL BE 5 FEET.
14. THE PLUM CREEK WASTEWATER AUTHORITY MUST APPROVE OIL AND GREASE INTERCEPTORS FOR COMMERCIAL INSTALLATIONS.
15. ALL MANHOLES SHALL BE PLACED ON A MINIMUM OF 1' OF ¾" WASH ROCK. IF ADDITIONAL SUBGRADE IS DISTURBED, EXCAVATION SHALL BE BACKFILLED WITH ¾" WASH ROCK OR OTHER APPROVED STRUCTURAL SOIL COMPACTED TO 95% OF ASTM D698 UNLESS OTHERWISE INSTRUCTED BY THE INSPECTOR.

LANDSCAPE NOTES

1. NON–IRRIGATED NATIVE SEED AREAS SHALL BE INSTALLED USING THE TOWN OF CASTLE ROCK GRADING EROSION AND SEDIMENT CONTROL MANUAL (GESC) STANDARD DETAIL #17.
2. NO TURF AND/OR OVERHEAD IRRIGATION ON SLOPES 3:1.
3. NO SLOPES GREATER THAN 3:1 ARE PERMITTED.
4. TOP SOIL, IF DISTURBED SHALL BE STOCK PILED AND REUSED ON THESITE.
5. NO MORE THAN SIXTY PERCENT OF THE TOTAL COMMERCIAL LANDSCAPE AREA SHALL INCLUDE IRRIGATED TURF GRASS.
6. NO INDIVIDUAL PLANT MAY HAVE SUPPLEMENTAL WATER DEMAND GREATER THAN 15" PER GROWING SEASON.

IRRIGATION NOTES

1. THE IRRIGATION SYSTEM SHALL BE EQUIPPED WITH A BACKFLOW PREVENTION ASSEMBLY APPROVED BY THE TOWN OF CASTLE ROCK.
2. IRRIGATION TAP, LINE, METER AND BACKFLOW PREVENTION ASSEMBLY MUST BE THE SAME SIZE FROM THE TAP TO A MINIMUM DISTANCE OF 10 PIPE DIAMETERS PAST THE BACKFLOW PREVENTION ASSEMBLY AND WINTERIZATION TEE.
3. WATER WASTE IS NOT ALLOWED PER THE TOWN OF CASTLE ROCK'S WATER USE MANAGEMENT PLAN. THEREFORE, ALL NOZZLES ARE TO BE FINE TUNE/ADJUSTED SO THAT OVERSPRAY ONTO HARD SURFACES IS ELIMINATED.
4. IRRIGATION IS NOT PERMITTED ON 3:1 SLOPES.
5. VELOCITY SHALL NOT EXCEED 7.5 FPS THROUGH THE WATER METER.
6. NO OVERHEAD IRRIGATION IN AREAS LESS THAN 10 FEET WIDE.
7. THERE IS TO BE NEITHER PLANT MATERIAL NOR IRRIGATION IN AREAS LESS THAN 4 FEET WIDE.

TRACER WIRE INSTALLATION NOTES

1. ALL WORK SHALL BE DONE IN ACCORDANCE WITH CURRENT TOWN OF CASTLE ROCK STANDARD NOTES, DETAILS AND SPECIFICATIONS.
2. TRACER WIRE IS REQUIRED ON ALL UNDERGROUND PIPE. A MAINLINE TRACER WIRE MUST BE INSTALLED WITH ALL SERVICE LATERAL TRACER WIRES PROPERLY CONNECTED TO ENSURE FULL LOCATING CAPABILITIES FROM A SINGLE CONNECTION POINT.
3. TRACER WIRE COLORS FOR STORM SEWER, DRAIN LINES, SANITARY SEWER, AND WATER MAINS SHALL BE IN ACCORDANCE WITH AMERICAN PUBLIC WORKS ASSOCIATION (APWA) UNIFORM COLOR CODE. ALL GROUNDING WIRE SHALL BE RED COLOR.
4. "OPEN TRENCH" TRACER WIRE SHALL BE #8 OR #10 AWG COPPER SOLID OR #12 AWG COPPER CLAD HIGH STRENGTH WITH MINIMUM 30–MIL HDPE INSULATION THICKNESS COMPLYING WITH ASTM D–1248, AND A MINIMUM AVERAGE TENSILE BREAK LOAD OF 450 LBS.
5. TRACER WIRE SHALL BE SECURED EVERY 5 FEET TO THE TOP OF THE PIPE AND TO THE SIDES OF MANHOLES AND INLETS USING TAPE, PLASTIC TIES, OR APPROVED ADHESIVE AT 5–FOOT INTERVALS.
6. TRACER WIRE SHALL BE SECURELY BONDED TOGETHER AT ALL WIRE JOINTS WITH LOCKABLE, CORROSION PROOF, WATERTIGHT CONNECTORS SPECIFICALLY DESIGNED FOR DIRECT BURIAL, AND FILLED WITH NON–HARDENING DIELECTRIC SILICONE SEALANT.
7. ANY DAMAGE OCCURRING DURING INSTALLATION OF THE TRACER WIRE MUST BE IMMEDIATELY REPAIRED BY REMOVING THE DAMAGED WIRE AND INSTALLING A NEW SECTION OF WIRE WITH APPROVED CONNECTORS. TAPING AND/OR SPRAY COATING IS NOT ALLOWED.
8. A MINIMUM OF 2 FEET OF EXCESS/SLACK WIRE IS REQUIRED IN ALL TRACER WIRE TEST STATIONS, MANHOLES, AND INLETS AFTER MEETING FINAL ELEVATION.
9. TRACER WIRE MUST BE PROPERLY GROUNDED AT ALL DEAD ENDS (MANHOLES, INLETS, OUTFALLS, FUTURE CONNECTIONS, ETC.) USING A MAGNESIUM GROUND ROD. THE GROUND ROD WILL BE CONNECTED TO 12– OR 14–AWG COPPER–CLAD STEEL WIRE WITH 30 MIL HDPE INSULATION AND RATED FOR DIRECT BURY USE AT 30 VOLTS WITH 21% CONDUCTIVITY.
10. TEST STATIONS SHALL PROVIDE PROTECTED ACCESS FOR A DIRECT CONNECTION TO THE TRACER WIRE SYSTEM AT GROUND SURFACE.
11. TRUNK LINE TRACER WIRE SHALL BE CONTINUOUS, AND PASS AROUND THE OUTSIDE OF VALVES AND OTHER STRUCTURES ON THE NORTH OR EAST SIDE.
12. THE CONTRACTOR SHALL OBTAIN ALL REQUIRED PERMITS (EXCAVATION, CONCRETE, TRAFFIC CONTROL, ETC.) AND PROVIDE A MINIMUM TWENTY–FOUR (24) HOURS' NOTICE TO THE ON–SITE TCR CONSTRUCTION INSPECTOR, (720) 733–2200, TO REQUEST A TRACER WIRE INSPECTION.
13. ALL NEW TRACER WIRE INSTALLATIONS SHALL BE TESTED AND LOCATED PRIOR TO ACCEPTANCE. TESTING AND LOCATING SHALL BE PERFORMED BY THE TCR CONSTRUCTION INSPECTOR AT THE COMPLETION OF ROUGH GRADING AND PRIOR TO FINAL ACCEPTANCE OF THE PROJECT. ANY DEFICIENCIES SHALL BE CORRECTED PRIOR TO FINAL ACCEPTANCE.

PROFESSIONAL ENGINEER CERTIFICATION

I HEREBY AFFIRM THAT THESE FINAL CONSTRUCTION PLANS WERE PREPARED UNDER MY DIRECT SUPERVISION, IN ACCORDANCE WITH ALL APPLICABLE TOWN OF CASTLE ROCK AND STATE OF COLORADO STANDARDS AND STATUTES, RESPECTIVELY; AND THAT I AM FULLY RESPONSIBLE FOR ALL DESIGN AND REVISIONS RELATIVE TO SAID PLANS.

STEPHEN M. DOUGLAS, P.E.
REGISTERED LICENSED PROFESSIONAL ENGINEER
STATE OF COLORADO No. 41176
FOR AND ON BEHALF OF
PERSONALIZED ENGINEERING SOLUTIONS, LLC
(720)388–8126

TOWN OF CASTLE ROCK APPROVAL
PLANS ARE HEREBY APPROVED FOR ONE YEAR FROM DATE OF DEVELOPMENT SERVICES APPROVAL

APPROVED BY:

DEVELOPMENT SERVICES

DATE	REVISION DESCRIPTION
MAR 14 2025	INITIAL CIVIL CD SUBMITTAL

CITY HOTEL
M1A 8930 SMITH ROAD DENVER, CO 80239 MERIDIAN 105 ARCHITECTURE

Drawing Name	Job Number	Prepared For	Designer	Drafter	Checked
02-GN1_CD.dwg	CITY HOTEL	WHITE DEVELOPMENT	SMD	SN	SMD

PES Personalized Engineering Solutions
Personalized Engineering Solutions, LLC
9249 S. Broadway #200-388
Highlands Ranch, CO 80129 720.388.8126
www.pengsolutions.com
Construction Management Civil Engineering Land Planning

CITY HOTEL, CASTLE ROCK
CONSTRUCTION DOCUMENTS
GENERAL NOTES

Sheet GN1 2 of 29
Date MARCH 2025

PATH: PATH P:\WHITE DEV CITY HOTEL\CADD\CIVIL\CD\02-GN1_CD.DWG
PLOTTED BY: S. DOUGLAS PLOT DATE: 3/14/2025 12:51 PM
XREFS:

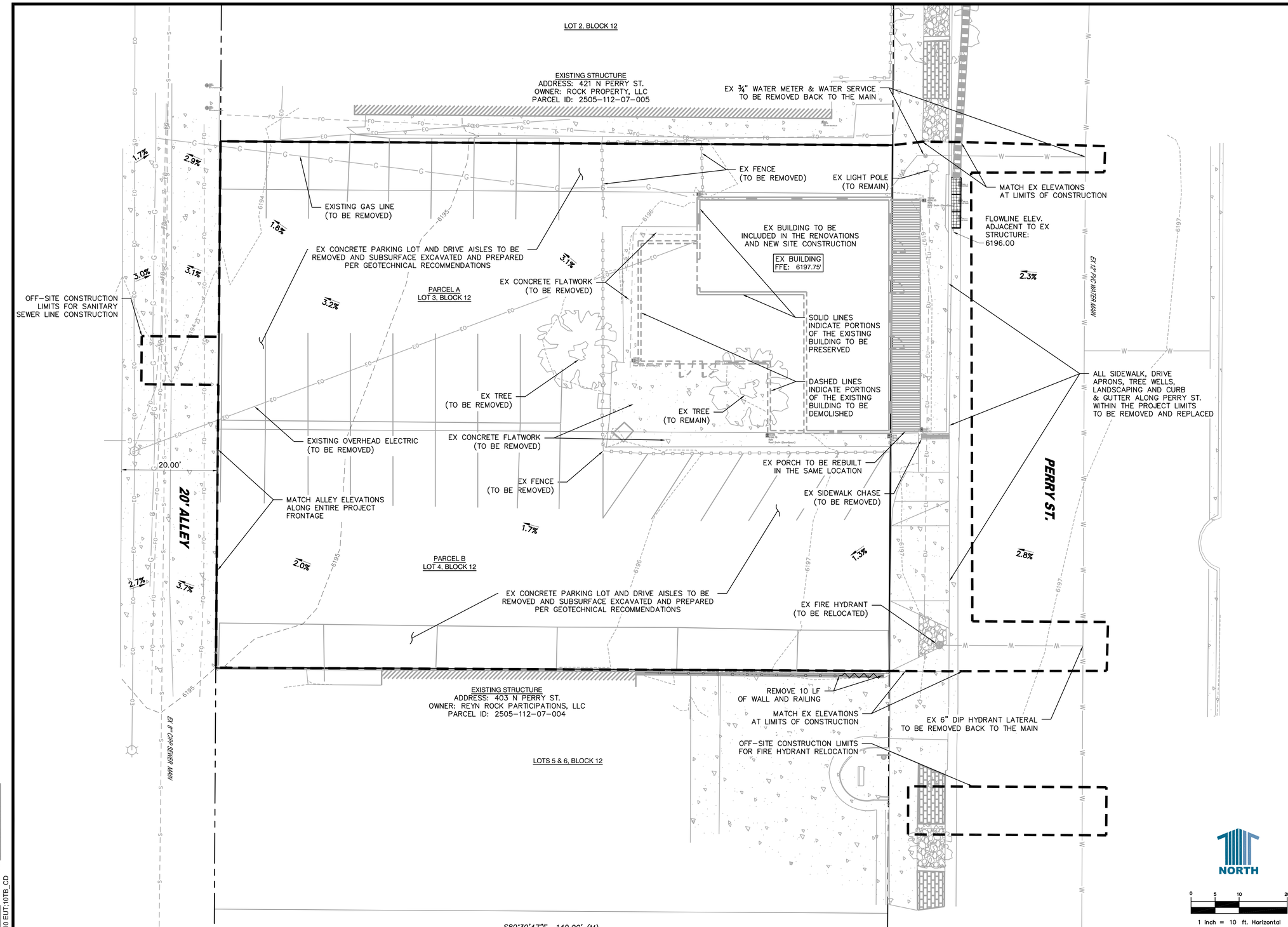

LEGEND

- PROPERTY BOUNDARY
- EX CURB AND GUTTER
- EX. GAS MAIN
- EX. WATER MAIN
- EX. WATER VALVE
- EX. FIRE HYDRANT
- EX. SANITARY SEWERS
- EX. UNDERGROUND ELECTRIC
- EX. OVERHEAD ELECTRIC
- EX. UNDERGROUND FIBER OPTIC
- EX. FENCE
- LIMITS OF CONSTRUCTION
- EXISTING MAJOR CONTOUR (6195)
- EXISTING MINOR CONTOUR (6197)

PROFESSIONAL ENGINEER CERTIFICATION

I HEREBY AFFIRM THAT THESE FINAL CONSTRUCTION PLANS WERE PREPARED UNDER MY DIRECT SUPERVISION, IN ACCORDANCE WITH ALL APPLICABLE TOWN OF CASTLE ROCK AND STATE OF COLORADO STANDARDS AND STATUTES, RESPECTIVELY; AND THAT I AM FULLY RESPONSIBLE FOR ALL DESIGN AND REVISIONS RELATIVE TO SAID PLANS.

STEPHEN M. DOUGLAS, P.E.
REGISTERED LICENSED PROFESSIONAL ENGINEER
STATE OF COLORADO No. 41176
FOR AND ON BEHALF OF
PERSONALIZED ENGINEERING SOLUTIONS, LLC
(720)388-8126

TOWN OF CASTLE ROCK APPROVAL
PLANS ARE HEREBY APPROVED FOR ONE YEAR FROM DATE OF DEVELOPMENT SERVICES APPROVAL

APPROVED BY:

DEVELOPMENT SERVICES

DATE	REVISION DESCRIPTION
MAR 14 2025	INITIAL CIVIL CD SUBMITTAL

CITY HOTEL
M1A ACOS SMITH ROAD SENECA, CO 80482 MERIDIAN 105 ARCHITECTURE

Drawing Name	03-DM1_CD.dwg
Job Number	CITY HOTEL
Prepared For	WHITE DEVELOPMENT
Designer	SMD
Drafter	SN
Checked	SMD

PES Personalized Engineering Solutions
Personalized Engineering Solutions, LLC
9249 S. Broadway #200-388
Highlands Ranch, CO 80129 720.388.8126
www.pengsolutions.com
Construction Management Civil Engineering Land Planning

CITY HOTEL, CASTLE ROCK
CONSTRUCTION DOCUMENTS
DEMOLITION PLAN

Sheet **DM1** 3 of 29

Date MARCH 2025

PATH: PATH P:\WHITE DEV CITY HOTEL\CADD\CIVIL\CD\03-DM1_CD.DWG
PLOTTED BY: S. DOUGLAS PLOT DATE: 3/14/2025 12:53 PM
XREFS: 10 BASE;10 EPN;10 EUT;10TB_CD

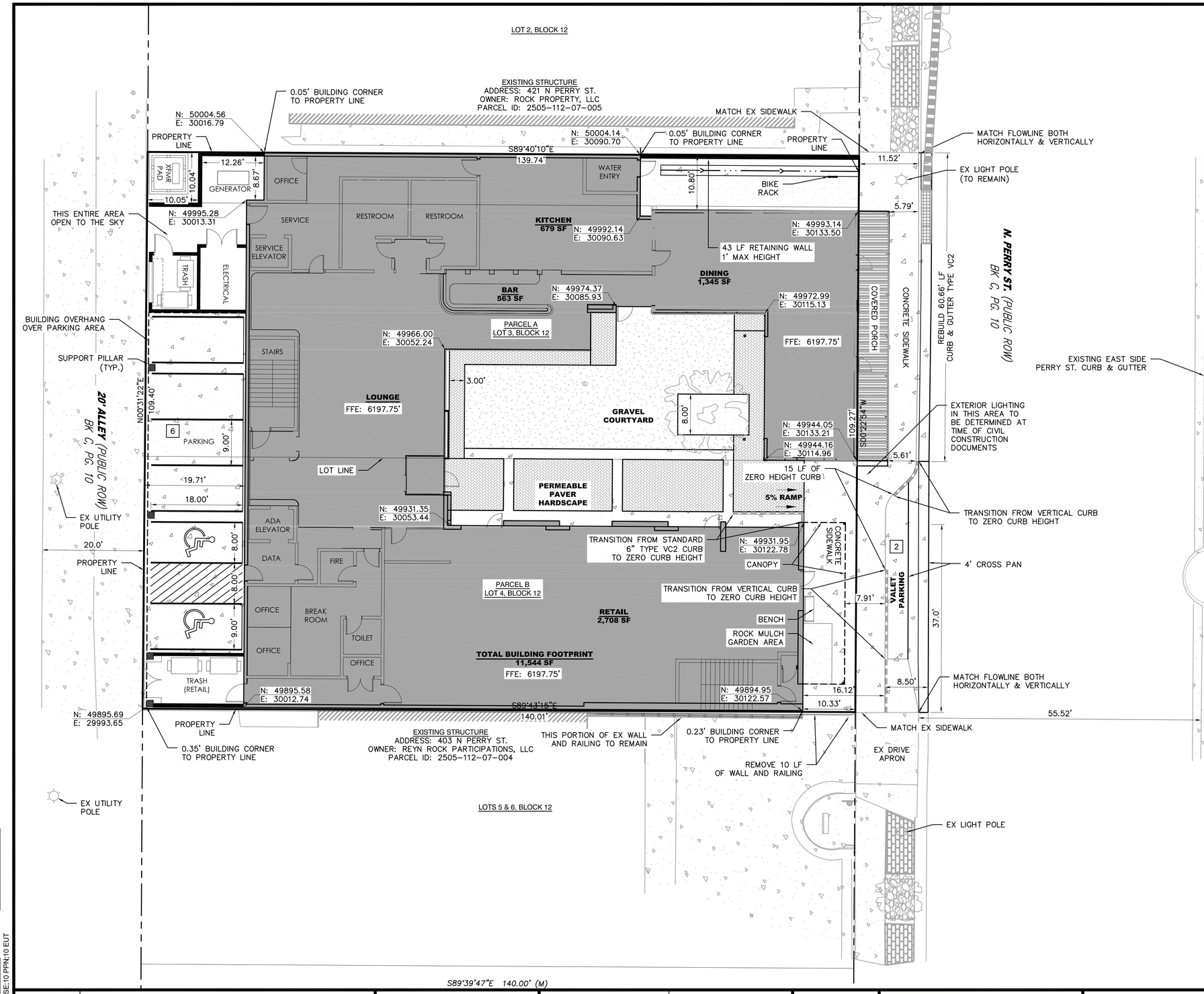

LEGEND

- PROPERTY BOUNDARY
- EX CURB AND GUTTER
- CURB HEIGHT TRANSITION ZONE
- PR RETAINING WALL
- EXISTING STRUCTURES (TO REMAIN)
- PR BUILDING
- PR CONCRETE SIDEWALK/PARKING
- PR PERMEABLE PAVERS/HARDSCAPE
- PR COMPACTED CRUSHER FINE SURFACE
- PR STREETSCAPE AREA
- PR BUILDING DECK
- EX CONCRETE FLATWORK

PARKING COUNT

NORTH

0 5 10 20

1 inch = 10 ft. Horizontal

PROFESSIONAL ENGINEER CERTIFICATION

I HEREBY AFFIRM THAT THESE FINAL CONSTRUCTION PLANS WERE PREPARED UNDER MY DIRECT SUPERVISION, IN ACCORDANCE WITH ALL APPLICABLE TOWN OF CASTLE ROCK AND STATE OF COLORADO STANDARDS AND STATUTES, RESPECTIVELY; AND THAT I AM FULLY RESPONSIBLE FOR ALL DESIGN AND REVISIONS RELATIVE TO SAID PLANS.

STEPHEN M. DOUGLAS, P.E.
REGISTERED LICENSED PROFESSIONAL ENGINEER
STATE OF COLORADO No. 41176
FOR AND ON BEHALF OF
PERSONALIZED ENGINEERING SOLUTIONS, LLC
(720)388-8126

TOWN OF CASTLE ROCK APPROVAL
PLANS ARE HEREBY APPROVED FOR ONE YEAR FROM DATE OF DEVELOPMENT SERVICES APPROVAL

APPROVED BY:

DEVELOPMENT SERVICES

DATE	REVISION DESCRIPTION
MAR 14 2025	INITIAL CIVIL CD SUBMITTAL

CITY HOTEL
M1A MEERIAN 105 ARCHITECTURE

Drawing Name: 04-SP1_CD.dwg
Job Number: CITY HOTEL
Prepared For: WHITE DEVELOPMENT
Designer: SMD | Drafter: SN | Checked: SMD

PES Personalized Engineering Solutions
Personalized Engineering Solutions, LLC
9249 S. Broadway #200-388
Highlands Ranch, CO 80129 720.388.8126
www.pengsolutions.com
Construction Management Civil Engineering Land Planning

CITY HOTEL, CASTLE ROCK
CONSTRUCTION DOCUMENTS
SITE PLAN

Sheet **SP1** 4 of 29

Date MARCH 2025

PATH: P:\WHITE DEV CITY HOTEL\CADD\CIVIL\CD\04-SP1_CD.DWG
PLOTTED BY: S. DOUGLAS PLOT DATE: 3/14/2025 12:55 PM
XREFS: 10 EPN;10 BASE;10 PPN;10 EUT

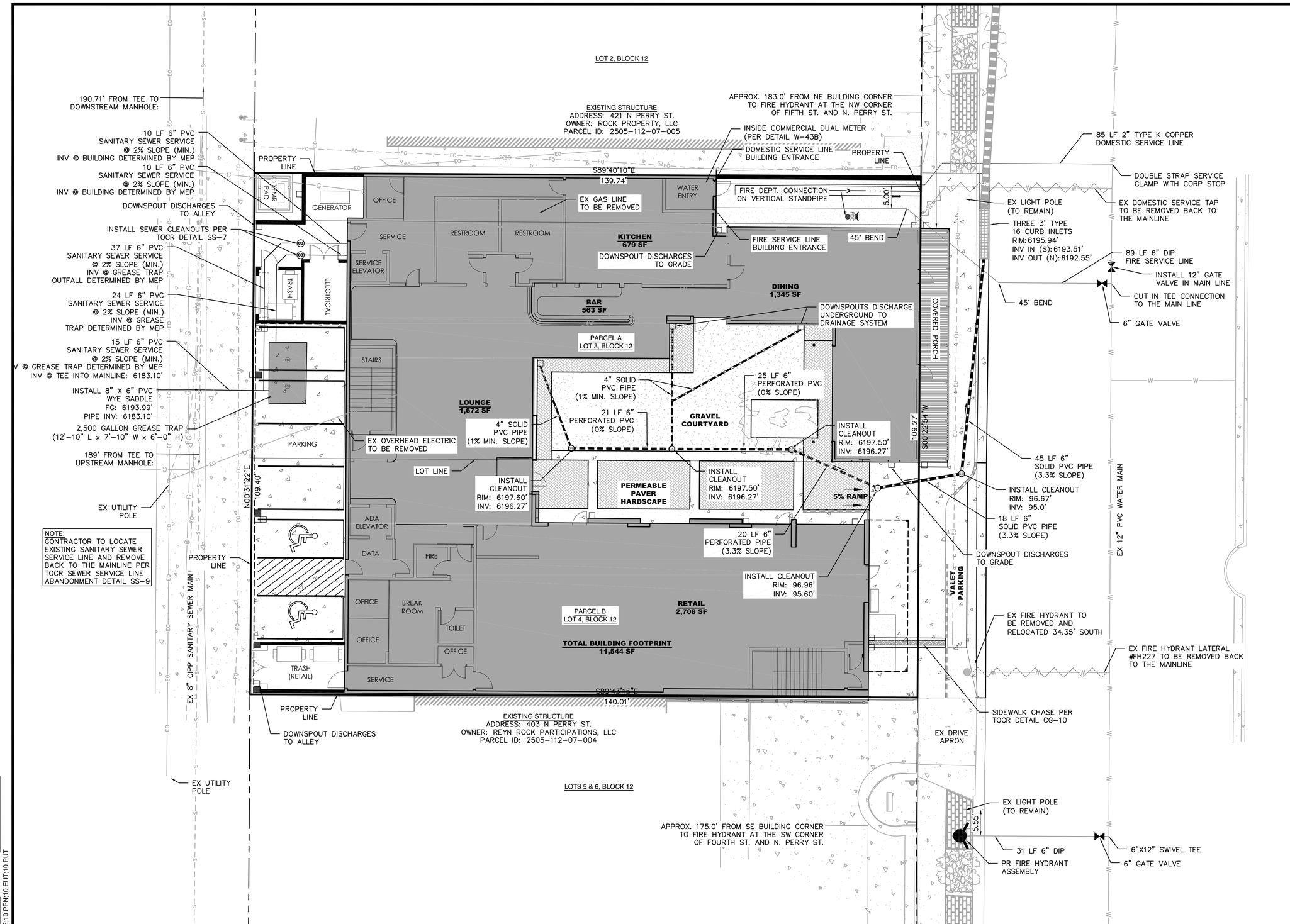

LEGEND

- PROPERTY BOUNDARY
- EX CURB AND GUTTER
- CURB HEIGHT TRANSITION ZONE
- PR RETAINING WALL
- EXISTING STRUCTURES (TO REMAIN)
- PR. 6" PVC SOLID PIPE
- PR. 4" PVC SOLID PIPE
- PR. 6" PVC PERFORATED PIPE
- PR BUILDING
- PR CONCRETE SIDEWALK/PARKING
- PR PERMEABLE PAVERS/HARDSCAPE
- PR COMPACTED CRUSHER FINE SURFACE
- PR STREETSCAPE AREA
- PR BUILDING DECK
- EX CONCRETE FLATWORK

UTILITY NOTES

1. THIS SITE IS LOCATED WITHIN THE TOWN OF CASTLE ROCK [YELLOW] WATER PRESSURE ZONE.
2. ALL PROPOSED EASEMENTS MUST BE RECORDED PRIOR TO ISSUANCE OF CONSTRUCTION PERMITS.
3. ALL UTILITY EASEMENTS FOR WATER AND WASTEWATER LINES SHALL BE FOR THE EXCLUSIVE USE OF THE TOWN SO THAT ACCESS AND MAINTENANCE MAY BE PERFORMED.
4. THE MINIMUM SEPARATION BETWEEN WATERLINES, SANITARY SEWER AND STORM SEWER LINES IS 10 FEET.
5. THE MINIMUM SEPARATION BETWEEN WATER SERVICE LINES IS 5 FEET.
6. LOCATIONS OF DOWNSPOUTS ARE APPROXIMATE. REFER TO ARCHITECTURAL DRAWINGS FOR EXACT LOCATIONS.
7. ANY TIE-IN, CROSSING OR LOWERING OF TOWN CRITICAL INFRASTRUCTURE WILL REQUIRE A TIME AND MATERIALS PERMIT (TMU) WITH FEES REQUIRED PRIOR TO CONSTRUCTION.

KEYNOTES:

1. DOWNSPOUT LOCATIONS

NORTH

0 5 10 20

1 inch = 10 ft. Horizontal

PROFESSIONAL ENGINEER CERTIFICATION

I HEREBY AFFIRM THAT THESE FINAL CONSTRUCTION PLANS WERE PREPARED UNDER MY DIRECT SUPERVISION, IN ACCORDANCE WITH ALL APPLICABLE TOWN OF CASTLE ROCK AND STATE OF COLORADO STANDARDS AND STATUTES, RESPECTIVELY; AND THAT I AM FULLY RESPONSIBLE FOR ALL DESIGN AND REVISIONS RELATIVE TO SAID PLANS.

STEPHEN M. DOUGLAS, P.E.
REGISTERED LICENSED PROFESSIONAL ENGINEER
STATE OF COLORADO No. 41176
FOR AND ON BEHALF OF
PERSONALIZED ENGINEERING SOLUTIONS, LLC
(720)388-8126

TOWN OF CASTLE ROCK APPROVAL
PLANS ARE HEREBY APPROVED FOR ONE YEAR FROM DATE OF DEVELOPMENT SERVICES APPROVAL

APPROVED BY:

DEVELOPMENT SERVICES

DATE	REVISION DESCRIPTION
MAR 14 2025	INITIAL CIVIL CD SUBMITTAL

CITY HOTEL
M1A ROSS SMITH ROAD SENATE, CO 80202 MERIDIAN 105 ARCHITECTURE

Drawing Name 05-UT1_CD.dwg			
Job Number CITY HOTEL			
Prepared For WHITE DEVELOPMENT	Designer SMD	Drafter SN	Checked SMD

PES Personalized Engineering Solutions
Personalized Engineering Solutions, LLC
9249 S. Broadway #200-388
Highlands Ranch, CO 80129 720.388.8126
www.pengsolutions.com
Construction Management Civil Engineering Land Planning

CITY HOTEL, CASTLE ROCK
CONSTRUCTION DOCUMENTS
OVERALL UTILITY PLAN

Sheet UT1 5 of 29

Date MARCH 2025

PATH: P:\WHITE DEV CITY HOTEL\CADD\CIVIL\CD\05-UT1_CD.DWG
PLOTTED BY: S. DOUGLAS PLOT DATE: 3/14/2025 12:56 PM
XREFS: 10 EPN;10 BASE;10 PPN;10 EUT;10 PUT

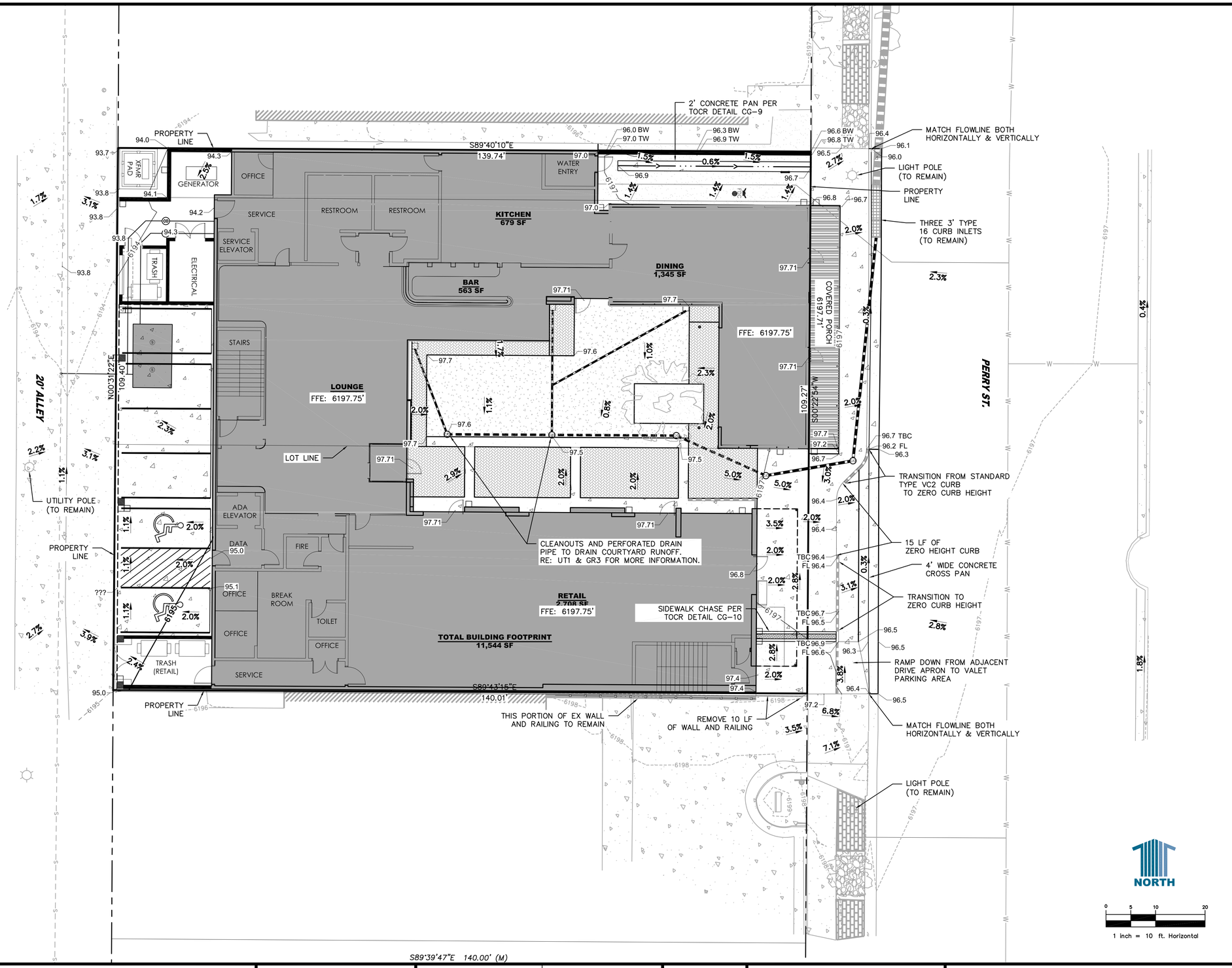

LEGEND

- PROPERTY BOUNDARY
- EX CURB AND GUTTER
- CURB HEIGHT TRANSITION ZONE
- PR RETAINING WALL
- EXISTING STRUCTURES (TO REMAIN)
- PR. 6" PVC SOLID PIPE
- PR. 4" PVC SOLID PIPE
- PR. 6" PVC PERFORATED PIPE
- PROPOSED MAJOR CONTOUR — 6195
- PROPOSED MINOR CONTOUR — 6197
- EXISTING MAJOR CONTOUR — 6195
- EXISTING MINOR CONTOUR — 6197

NORTH

0 5 10 20

1 inch = 10 ft. Horizontal

PROFESSIONAL ENGINEER CERTIFICATION

I HEREBY AFFIRM THAT THESE FINAL CONSTRUCTION PLANS WERE PREPARED UNDER MY DIRECT SUPERVISION, IN ACCORDANCE WITH ALL APPLICABLE TOWN OF CASTLE ROCK AND STATE OF COLORADO STANDARDS AND STATUTES, RESPECTIVELY; AND THAT I AM FULLY RESPONSIBLE FOR ALL DESIGN AND REVISIONS RELATIVE TO SAID PLANS.

STEPHEN M. DOUGLAS, P.E.
REGISTERED LICENSED PROFESSIONAL ENGINEER
STATE OF COLORADO No. 41176
FOR AND ON BEHALF OF
PERSONALIZED ENGINEERING SOLUTIONS, LLC
(720)388-8126

TOWN OF CASTLE ROCK APPROVAL
PLANS ARE HEREBY APPROVED FOR ONE YEAR FROM DATE OF DEVELOPMENT SERVICES APPROVAL

APPROVED BY:

DEVELOPMENT SERVICES

DATE	REVISION DESCRIPTION
MAR 14 2025	INITIAL CIVIL CD SUBMITTAL

CITY HOTEL
M1A 4930 SMITH ROAD DENVER, CO 80216 MERIDIAN 105 ARCHITECTURE

Drawing Name	Job Number	Prepared For	Designer	Drafter	Checked
06-GR1_CD.dwg	CITY HOTEL	WHITE DEVELOPMENT	SMD	SN	SMD

PES Personalized Engineering Solutions
Personalized Engineering Solutions, LLC
9249 S. Broadway #200-388
Highlands Ranch, CO 80129 720.388.8126
www.pengsolutions.com
Construction Management Civil Engineering Land Planning

CITY HOTEL, CASTLE ROCK
CONSTRUCTION DOCUMENTS
OVERALL GRADING PLAN

Sheet GR1 6 of 29

Date MARCH 2025

PATH: P:\WHITE DEV CITY HOTEL\CADD\CIVIL\CD\06-GR1_CD.DWG
PLOTTED BY: S. DOUGLAS PLOT DATE: 3/14/2025 12:57 PM
XREFS: 10 EPN;10 BASE;10 PPN;10 EUT;10 PUT

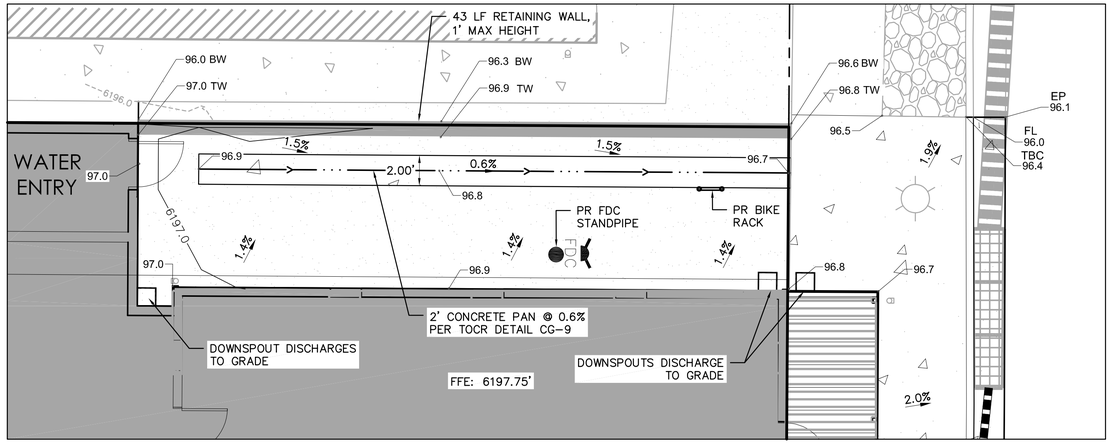

NORTHEAST CORNER DETAILED GRADING PLAN

SCALE: 1" = 5'

NORTH

0 2.5 5 10

1 inch = 5 ft. Horizontal

LEGEND

- PROPERTY BOUNDARY
- EX CURB AND GUTTER
- CURB HEIGHT TRANSITION ZONE
- PR RETAINING WALL
- EXISTING STRUCTURES (TO REMAIN)
- PR. 6" PVC SOLID PIPE
- PR. 4" PVC SOLID PIPE
- PR. 6" PVC PERF. PIPE
- PROPOSED MAJOR CONTOUR — 6195.0
- PROPOSED MINOR CONTOUR — 6197.0
- EXISTING MAJOR CONTOUR — 6195.0
- EXISTING MINOR CONTOUR — 6197.0

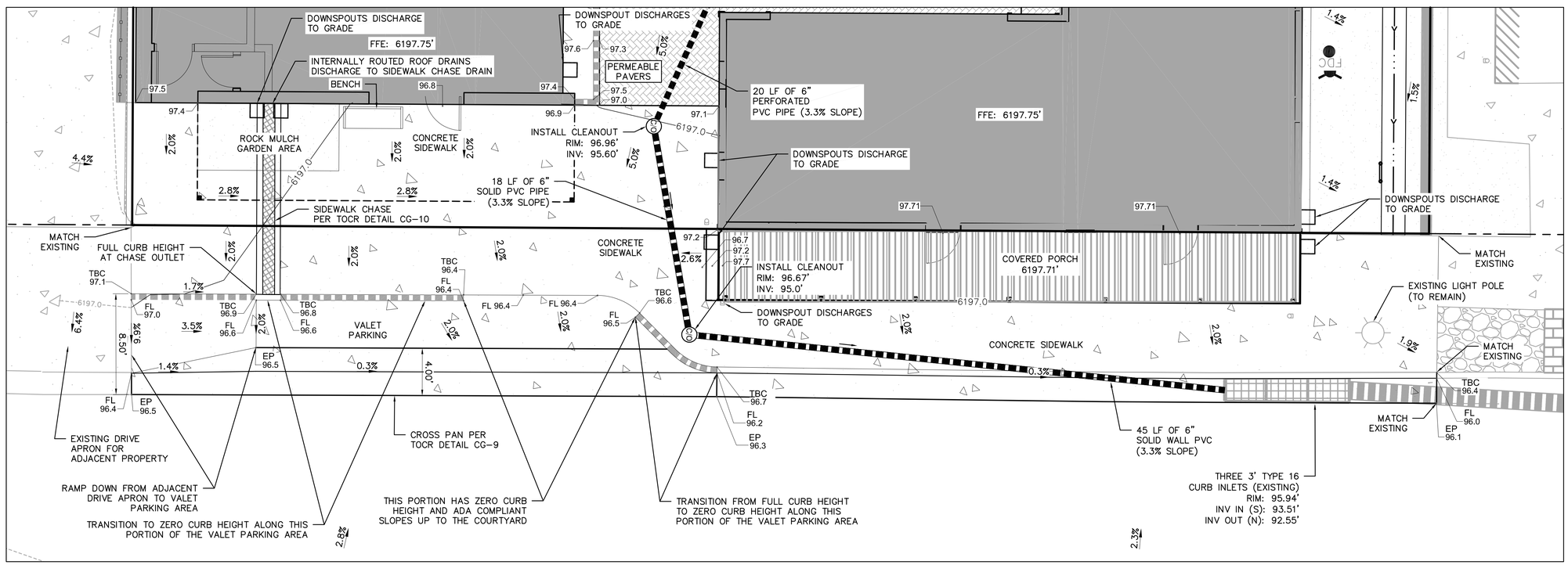

PERRY ST. FRONTAGE DETAILED GRADING PLAN

SCALE: 1" = 5'

NORTH

0 2.5 5 10

1 inch = 5 ft. Horizontal

PROFESSIONAL ENGINEER CERTIFICATION

I HEREBY AFFIRM THAT THESE FINAL CONSTRUCTION PLANS WERE PREPARED UNDER MY DIRECT SUPERVISION, IN ACCORDANCE WITH ALL APPLICABLE TOWN OF CASTLE ROCK AND STATE OF COLORADO STANDARDS AND STATUTES, RESPECTIVELY; AND THAT I AM FULLY RESPONSIBLE FOR ALL DESIGN AND REVISIONS RELATIVE TO SAID PLANS.

STEPHEN M. DOUGLAS, P.E.
REGISTERED LICENSED PROFESSIONAL ENGINEER
STATE OF COLORADO No. 41176
FOR AND ON BEHALF OF
PERSONALIZED ENGINEERING SOLUTIONS, LLC
(720)388-8126

TOWN OF CASTLE ROCK APPROVAL
PLANS ARE HEREBY APPROVED FOR ONE YEAR FROM DATE OF DEVELOPMENT SERVICES APPROVAL

APPROVED BY:

DEVELOPMENT SERVICES

DATE	REVISION DESCRIPTION
MAR 14 2025	INITIAL CIVIL CD SUBMITTAL

CITY HOTEL

M1A 4030 SMITH ROAD DENVER, CO 80216 MERIDIAN 105 ARCHITECTURE

Drawing Name	Job Number	Prepared For	Designer	Drafter	Checked
07-GR2_CD.dwg	CITY HOTEL	WHITE DEVELOPMENT	SMD	SN	SMD

PES Personalized Engineering Solutions
Personalized Engineering Solutions, LLC
9249 S. Broadway #200-388
Highlands Ranch, CO 80129 720.388.8126
www.pengsolutions.com
Construction Management Civil Engineering Land Planning

CITY HOTEL, CASTLE ROCK

CONSTRUCTION DOCUMENTS

DETAILED GRADING PLAN

Sheet GR2 7 of 29

Date MARCH 2025

PATH: P:\WHITE DEV CITY HOTEL\CADD\CIVIL\CD\07-GR2_CD.DWG
PLOTTED BY: S. DOUGLAS PLOT DATE: 3/14/2025 12:58 PM
XREFS: 10 EPN;10 BASE;10 PPN;10 PUT;10 EUT

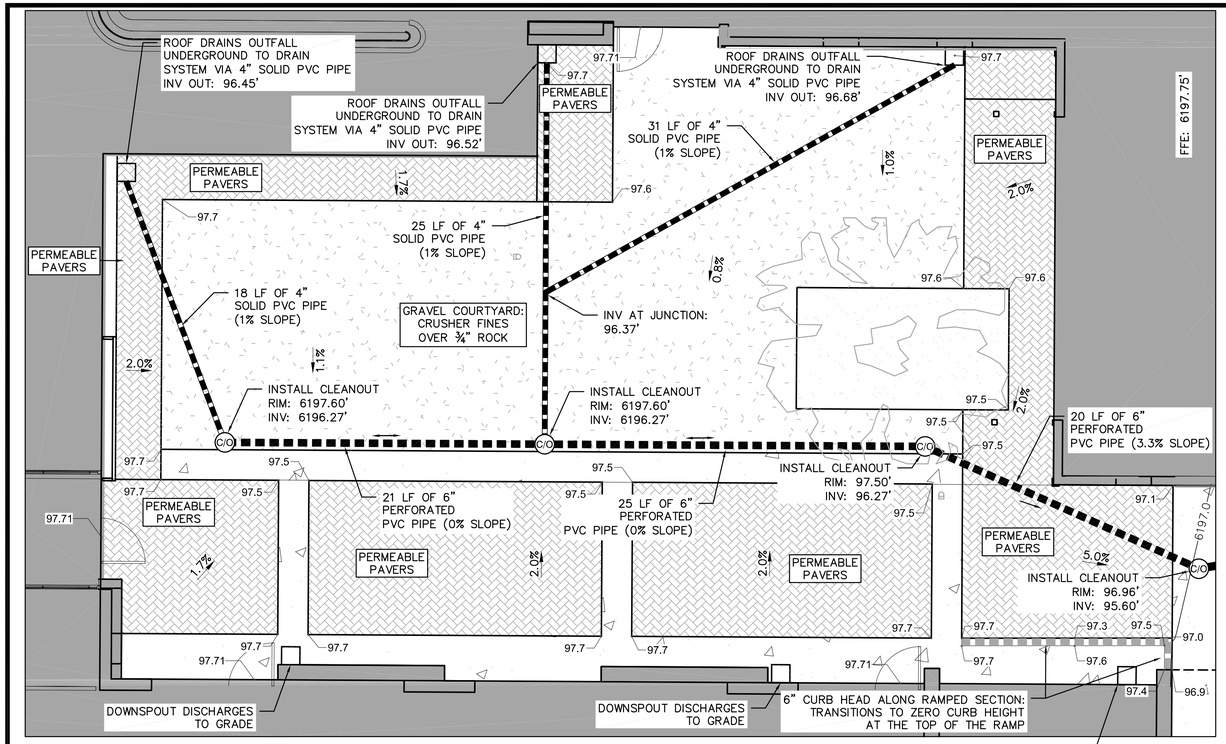

COURTYARD DETAILED GRADING PLAN

SCALE: 1" = 5'

NORTH

0 2.5 5 10

1 inch = 5 ft. Horizontal

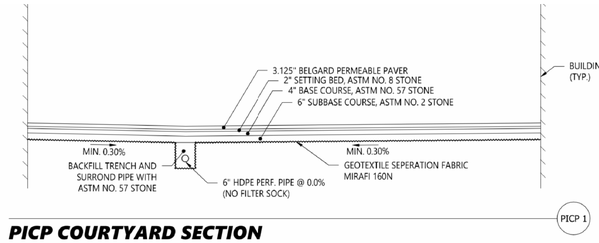

PICP COURTYARD SECTION

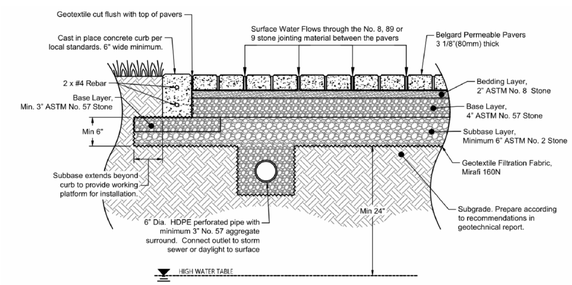

PICP PAVEMENT SECTION W/ UNDERDRAIN

LEGEND

- PROPERTY BOUNDARY
- EX CURB AND GUTTER
- CURB HEIGHT TRANSITION ZONE
- PR RETAINING WALL
- EXISTING STRUCTURES (TO REMAIN)
- PR. 6" PVC SOLID PIPE
- PR. 4" PVC SOLID PIPE
- PR. 6" PVC PERF. PIPE
- PROPOSED MAJOR CONTOUR — 6195.0
- PROPOSED MINOR CONTOUR — 6197.0
- EXISTING MAJOR CONTOUR — 6195.0
- EXISTING MINOR CONTOUR — 6197.0

COURTYARD GRADING NOTES

1. COURTYARD SHALL BE CRUSHER FINES OVER ¾" WASHED ROCK.
2. COURTYARD SUBGRADE SHALL BE GRADED AT 0.3% MIN. SLOPES AWAY FROM THE BUILDING AND TOWARDS THE PERFORATED DRAINAGE COLLECTION PIPE, PER THE PICP COURTYARD SECTION, THIS SHEET.
3. MIRAFI 160N GEOTEXTILE SEPARATION FABRIC SHALL BE USED BETWEEN THE SUBGRADE AND THE ROCK.
4. THE SUBGRADE SHALL BE PREPARED ACCORDING TO THE GEOTECHNICAL RECOMMENDATIONS.

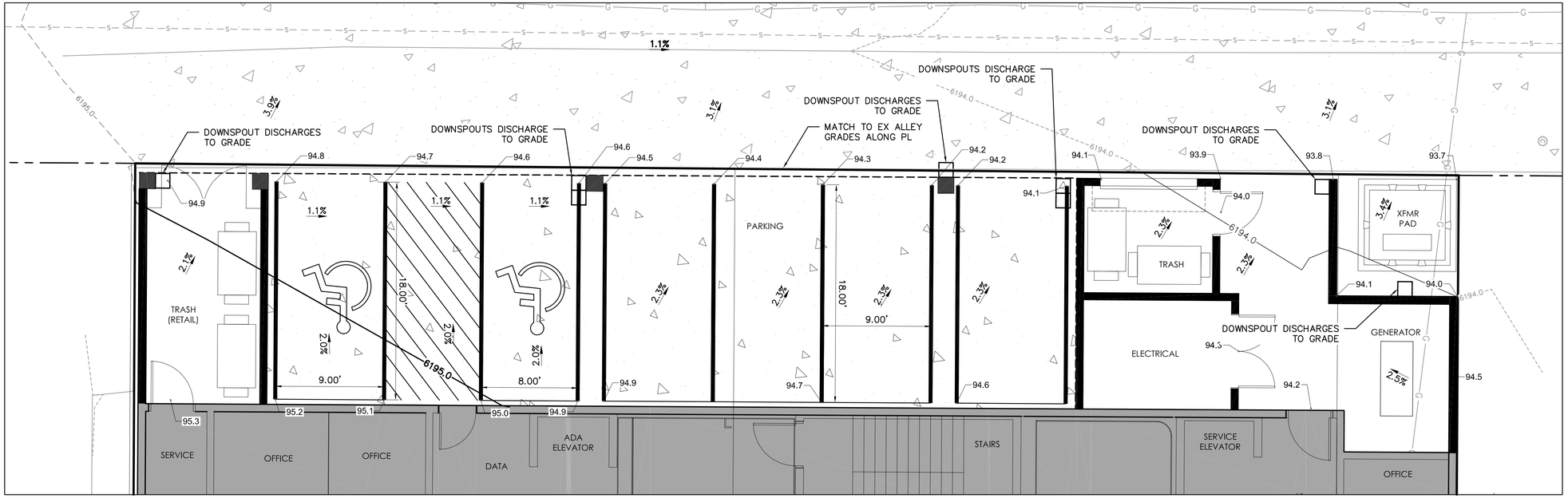

REAR PARKING AND ALLEY DETAILED GRADING PLAN

SCALE: 1" = 5'

NORTH

0 2.5 5 10

1 inch = 5 ft. Horizontal

PROFESSIONAL ENGINEER CERTIFICATION

I HEREBY AFFIRM THAT THESE FINAL CONSTRUCTION PLANS WERE PREPARED UNDER MY DIRECT SUPERVISION, IN ACCORDANCE WITH ALL APPLICABLE TOWN OF CASTLE ROCK AND STATE OF COLORADO STANDARDS AND STATUTES, RESPECTIVELY; AND THAT I AM FULLY RESPONSIBLE FOR ALL DESIGN AND REVISIONS RELATIVE TO SAID PLANS.

STEPHEN M. DOUGLAS, P.E.
REGISTERED LICENSED PROFESSIONAL ENGINEER
STATE OF COLORADO No. 41176
FOR AND ON BEHALF OF
PERSONALIZED ENGINEERING SOLUTIONS, LLC
(720)388-8126

TOWN OF CASTLE ROCK APPROVAL
PLANS ARE HEREBY APPROVED FOR ONE YEAR FROM DATE OF DEVELOPMENT SERVICES APPROVAL

APPROVED BY:

DEVELOPMENT SERVICES

DATE	REVISION DESCRIPTION
MAR 14 2025	INITIAL CIVIL CD SUBMITTAL

CITY HOTEL
M1A | 4020 SMITH ROAD DENVER, CO 80216 MERIDIAN 105 ARCHITECTURE

Drawing Name: 08-GR3_CD.dwg			
Job Number: CITY HOTEL			
Prepared For: WHITE DEVELOPMENT	Designer: SMD	Drafter: SN	Checked: SMD

PES Personalized Engineering Solutions
Personalized Engineering Solutions, LLC
9249 S. Broadway #200-388
Highlands Ranch, CO 80129 720.388.8126
www.pengsolutions.com
Construction Management Civil Engineering Land Planning

CITY HOTEL, CASTLE ROCK
CONSTRUCTION DOCUMENTS
DETAILED GRADING PLAN

Sheet GR3 8 of 29

Date MARCH 2025

PATH: P:\WHITE DEV CITY HOTEL\CADD\CIVIL\CD\08-GR3_CD.DWG
PLOTTED BY: S. DOUGLAS PLOT DATE: 3/14/2025 1:00 PM
XREFS: 10 EPN;10 BASE;10 PPN;10 PUT;10 EUT

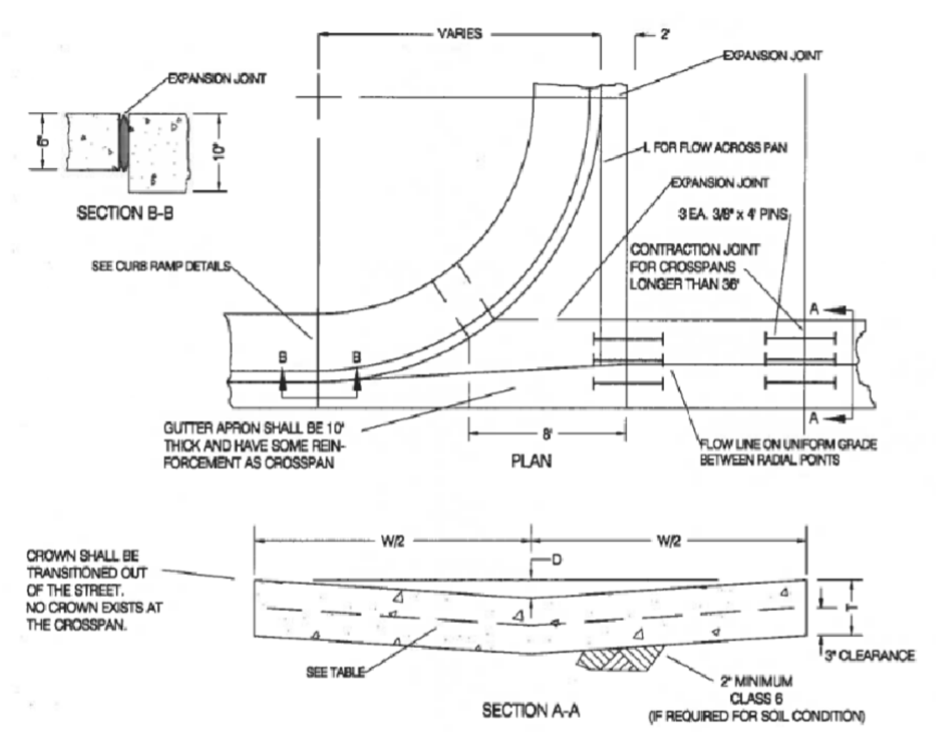

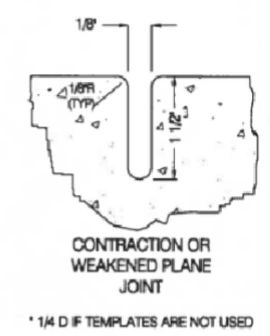

* 1/4 D IF TEMPLATES ARE NOT USED

WIDTH (W)	DEPTH (D)	THICKNESS (T)
6'	1 - 1/2"	8"
8'	2"	10"
10'	2 - 1/2"	10"

PAN LENGTH	WIRE MESH CALLED FOR	REPLACE WITH REBAR HAVING END AREA OF
24'	6x6 - 4.4	0.10 SQ. IN. OER FT. (#4 @ 18" E.W.)
32'	6x6 - 2.2	0.13 SQ. IN. OER FT. (#4 @ 18" E.W.)
36'	6x6 - 0.0	0.20 SQ. IN. OER FT. (#4 @ 12" E.W.)
40'	(2) 6x6 - 2.2	0.26 SQ. IN. OER FT. (#4 @ 9" E.W.)

NOTE:

SQUARE RETURNS AND PANS SHALL USE WIRE MESH AS SHOWN IN THE TABLE ABOVE. WHEN WIRE MESH IS NOT AVAILABLE, STEEL REINFORCING BAR MAY BE SUBSTITUTED.

Sheet Revisions | Date | Comments

Town of Castle Rock, 100 N. Wilcox St., Castle Rock, CO 80104, Phone: (720) 733-2200, Fax: (720) 733-2217, Development Services

CROSSPANS

Issued By: Town of Castle Rock, Development Services March 31, 2010

DETAIL PLAN NO. CG-9 — Sheet 1 of 1

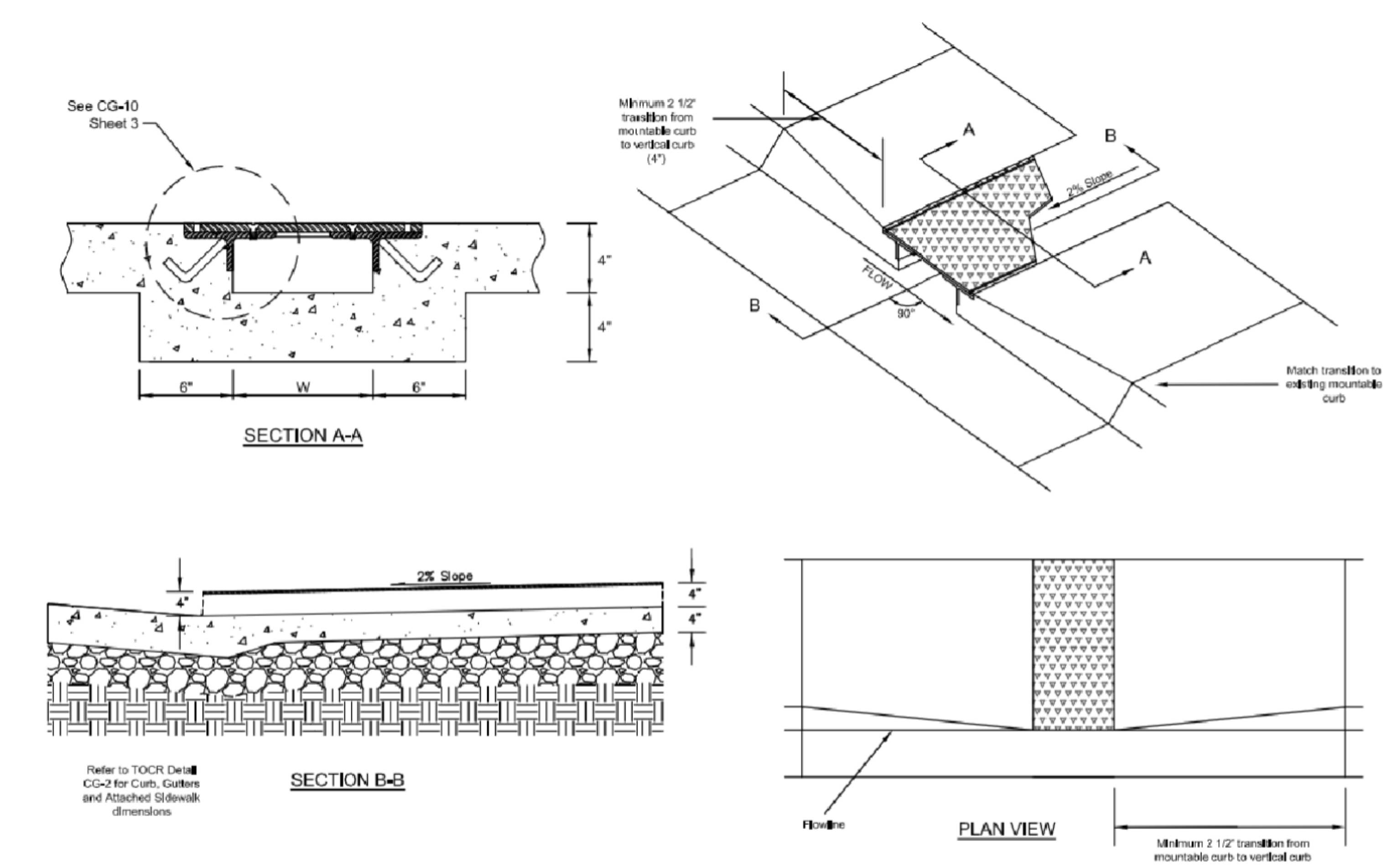

Sheet Revisions | Date | Comments

Town of Castle Rock, 100 N. Wilcox St., Castle Rock, CO 80104, Phone: (720) 733-2200, Fax: (720) 733-2217, Development Services

SIDEWALK CURB CHASE (Mountable Curb Application)

Issued By: Town of Castle Rock, Development Services December 13, 2022

DETAIL PLAN NO. CG-10 — Sheet 1 of 3

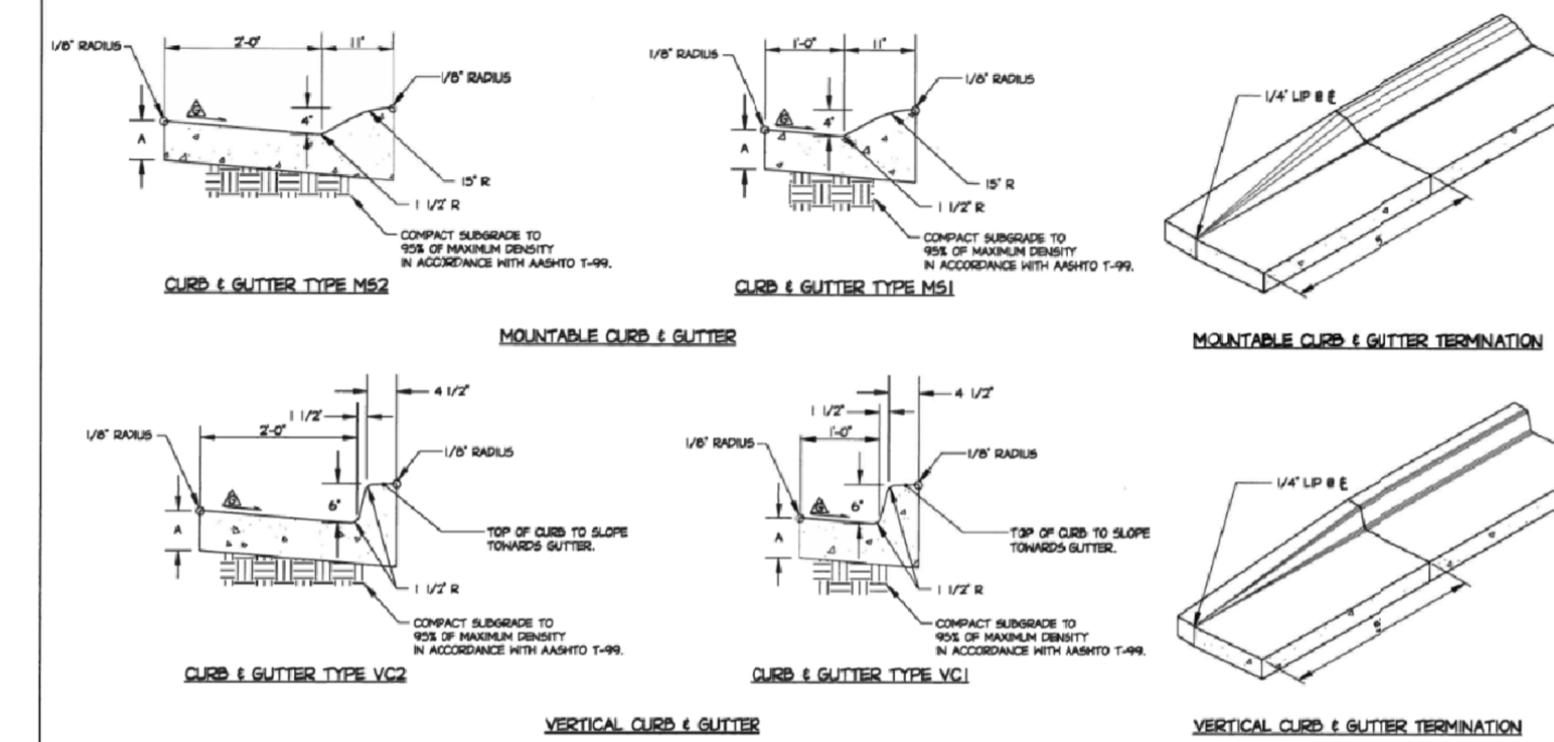

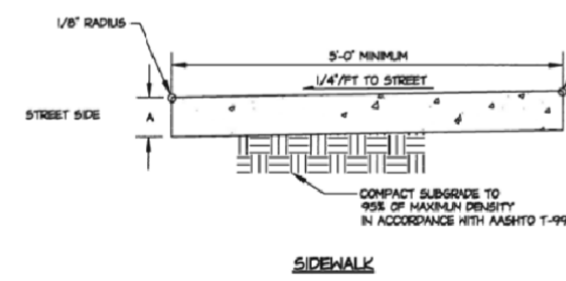

GENERAL NOTES

1. DIMENSION A SHALL BE 6', 8', OR 10' (SEE PLANS).
2. CONTRACTION JOINTS REQUIRED AT MAXIMUM 10' SPACING, MINIMUM 5' SPACING. THE DEPTH OF OPEN JOINTS SHALL BE 1/3 THE DEPTH OF CONCRETE.
3. EXPANSION JOINTS, AT INTERVALS OF 500', SHALL BE PLACED FOR THE FULL DEPTH OF THE CONCRETE.
4. CURB & GUTTER SHALL BE PAID BY LINEAL FOOT, BY CURB & GUTTER TYPE (A").
5. SIDEWALK SHALL BE PAID BY SQUARE YARD, BY CONCRETE SIDEWALK (A").

⚠ GUTTER CROSS SLOPES SHALL BE 1 IN./FT. WHEN DRAINING TOWARD CURB, AND 1/2 IN./FT WHEN DRAINING AWAY FROM CURB.

Sheet Revisions | Date | Comments

Town of Castle Rock, 100 N. Wilcox St., Castle Rock, CO 80104, Phone: (720) 733-2200, Fax: (720) 733-2217, Development Services

CURB, GUTTERS, AND SIDEWALK

Issued By: Town of Castle Rock, Development Services March 31, 2010

DETAIL PLAN NO. CG-1 — Sheet 1 of 1

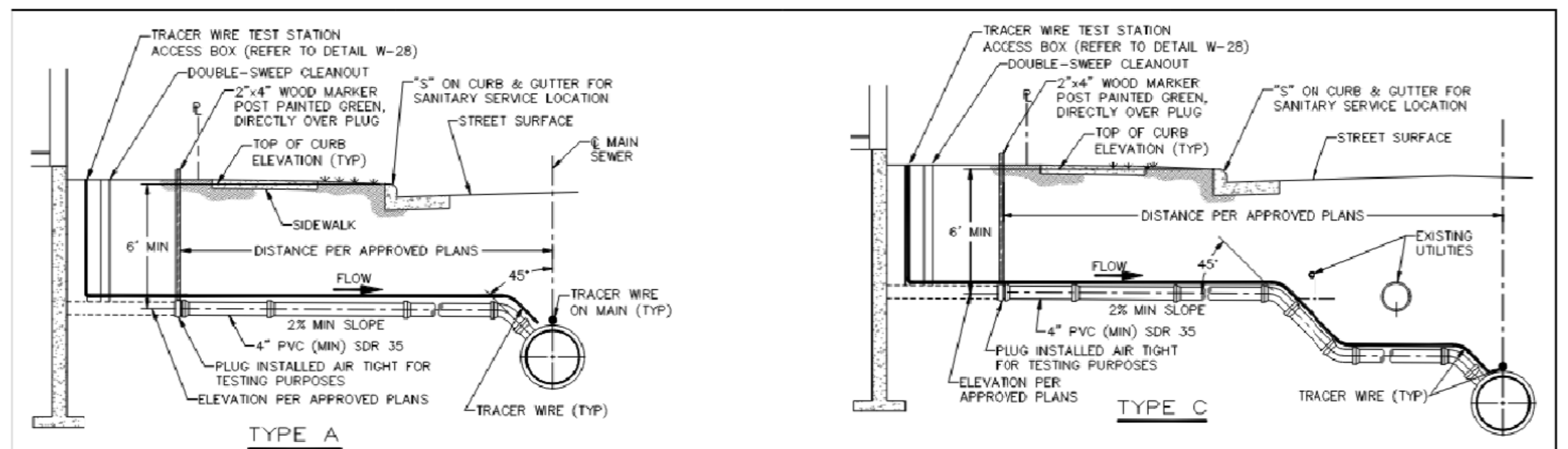

NOTES:
1. TYPE "A" ELEMENTS ARE TYPICAL FOR ALL TYPES UNLESS SPECIFICALLY NOTED OTHERWISE.
2. ALL LATERALS SHALL BE LOCATED 10' MINIMUM DISTANCE FROM THE DOWNHILL PROPERTY LINE OF THE SERVICE SIDE OF THE LOT, UNLESS OTHERWISE APPROVED BY THE TOWN PRIOR TO INSTALLATION.
3. ALL SEWER LATERAL CONNECTIONS SHALL BE TYPE "A" AND SHALL BE CONSTRUCTED ON A STRAIGHT LINE AND GRADE BETWEEN CONTROL POINTS EXCEPT AS OTHERWISE INDICATED ON THE APPROVED PROJECT PLANS.
4. TRACER WIRE IS REQUIRED FOR ALL SANITARY SEWER MAINS, LATERALS AND MANHOLES.
5. TRACER WIRE SHALL BE BROUGHT UP IN A TRACER WIRE TEST STATION LOCATED BETWEEN CLEANOUT AND FOUNDATION, AND IS TO BE PROVIDED BY THE BUILDER.
6. ALL LATERALS SHALL BE INSTALLED WITH BEDDING MATERIAL A MINIMUM OF 4" ABOVE AND BELOW THE PIPE.

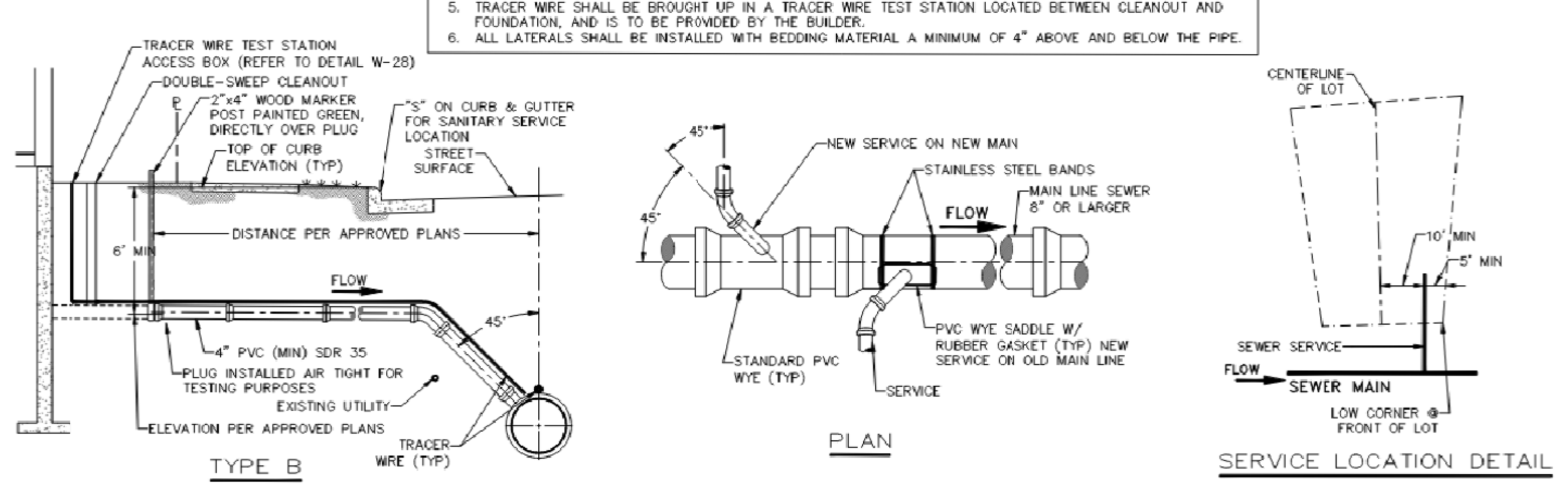

Sheet Revisions	
Date	Comments
3/20	REVISED PER STAFF COMMENTS
12/22	REVISED PER STAFF COMMENTS

Town of Castle Rock, 100 N. Wilcox St., Castle Rock, CO 80104, Phone: (720) 733-2200, Fax: (720) 733-2217, Development Services

SEWER LATERAL CONNECTIONS

Issued By: Town of Castle Rock, Development Services January 1, 2023

DETAIL PLAN NO. SS-2 — Sheet 1 of 1

NOTES:
1. ALL TRENCHES SHALL BE BACKFILLED IN ACCORDANCE WITH THIS DETAIL UNLESS OTHERWISE SPECIFIED BY PUBLIC WORKS.
2. PRIOR TO PLACEMENT OF CONCRETE, ALL EDGES SHALL BE SAW CUT TO A CLEAN, STRAIGHT, AND VERTICAL EDGE.
3. PRIOR TO PLACEMENT OF ASPHALT, 18 INCHES OF ADJACENT ASPHALT SHALL BE MILLED TO 2 INCH DEPTH ON ALL SIDES TO MATCH EXISTING PAVEMENT. INNER SURFACE TO BE TACKED WITH HSS-1.
4. WHEN SUBSTITUTING FOR BACKFILL MATERIAL, FLOWABLE FILL SHALL CONFORM TO MGPEC CLSM STANDARDS.
5. TRENCH WIDTH SHALL NOT BE MORE THAN 16" NOR LESS THAN 12" WIDER THAN THE DIAMETER OF THE PIPE.
6. 95% OF ASTM D698 STANDARD COMPACTION EFFORT IS REQUIRED ON ALL TRENCHING ZONES, IN BOTH IMPROVED & UNIMPROVED AREAS.
7. IN UNIMPROVED AREAS, ALL DISTURBED AREAS SHALL BE REGRADED, SEEDED & MULCHED.
8. IN CONCRETE ROADWAYS, A MINIMUM OF 1/2 PANEL WIDTH OR 10' x 5' SECTION WILL BE ALLOWED TO REMAIN, OTHERWISE THE ENTIRE CONCRETE PANEL MUST BE REPLACED.
9. USE #4 REBAR AT 2' CENTERS ALONG THE PERIMETER OF CONCRETE REPLACEMENT SECTIONS.
10. 6" MAXIMUM COMPACTED LIFT THICKNESS IF FLOWABLE FILL NOT REQUIRED.
11. BEDDING MATERIAL DEPTH WHEN INSTALLING STORM SEWER SHALL BE UP TO SPRING LINE, EXCEPT IN AREAS OF UNSUITABLE BACKFILL, THEN BEDDING MATERIAL SHALL BE 12" ABOVE PIPE.
12. TRENCH WIDTHS LESS THAN 4' OR TRENCHING THAT EXPERIENCES CAVE-INS OR SLOUGHING SHALL REQUIRE FLOWABLE FILL IN ORDER TO ACHIEVE COMPACTION.

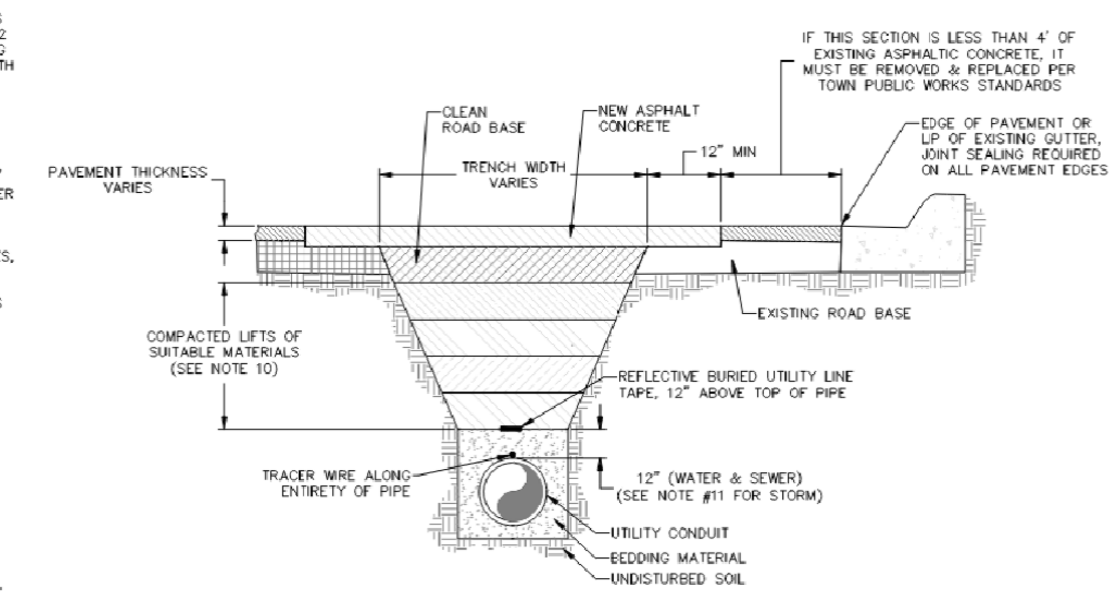

Sheet Revisions	
Date	Comments
3/20	REVISED PER STAFF COMMENTS
8/22	REVISED PER STAFF COMMENTS

Town of Castle Rock, 100 N. Wilcox St., Castle Rock, CO 80104, Phone: (720) 733-2200, Fax: (720) 733-2217, Development Services

SANITARY SEWER TRENCH DETAIL

Issued By: Town of Castle Rock, Development Services January 1, 2023

DETAIL PLAN NO. SS-8 — Sheet 1 of 1

PROFESSIONAL ENGINEER CERTIFICATION

I HEREBY AFFIRM THAT THESE FINAL CONSTRUCTION PLANS WERE PREPARED UNDER MY DIRECT SUPERVISION, IN ACCORDANCE WITH ALL APPLICABLE TOWN OF CASTLE ROCK AND STATE OF COLORADO STANDARDS AND STATUTES, RESPECTIVELY; AND THAT I AM FULLY RESPONSIBLE FOR ALL DESIGN AND REVISIONS RELATIVE TO SAID PLANS.

STEPHEN M. DOUGLAS, P.E.
REGISTERED LICENSED PROFESSIONAL ENGINEER
STATE OF COLORADO No. 41176
FOR AND ON BEHALF OF
PERSONALIZED ENGINEERING SOLUTIONS, LLC
(720)388-8126

TOWN OF CASTLE ROCK APPROVAL
PLANS ARE HEREBY APPROVED FOR ONE YEAR FROM DATE OF DEVELOPMENT SERVICES APPROVAL

APPROVED BY:

DEVELOPMENT SERVICES

PATH: PATH P:\WHITE DEV CITY HOTEL\CADD\CIVIL\CD\09-12-DET_CD.DWG
PLOTTED BY: S. DOUGLAS PLOT DATE: 3/14/2025 1:07 PM
XREFS: 10 BASE;10 EPN;10 EUT;10 LSBASE;10 PPN;10 PUT

DATE	REVISION DESCRIPTION
MAR 14 2025	INITIAL CIVIL CD SUBMITTAL

CITY HOTEL
M1A — 6030 SMITH ROAD DENVER, CO 80216 MERIDIAN 105 ARCHITECTURE

Drawing Name: 09-12-DET_CD.dwg
Job Number: CITY HOTEL
Prepared For: WHITE DEVELOPMENT
Designer: SMD | Drafter: SN | Checked: SMD

PES Personalized Engineering Solutions
Personalized Engineering Solutions, LLC
9249 S. Broadway #200-388
Highlands Ranch, CO 80129 720.388.8126
www.pengsolutions.com
Construction Management Civil Engineering Land Planning

CITY HOTEL, CASTLE ROCK
CONSTRUCTION DOCUMENTS
CIVIL SITE DETAILS

Sheet DET1 — 09 of 29
Date MARCH 2025

SANITARY SEWER SERVICE LINE ABANDONMENT REQUIREMENTS

1. ABANDONMENT TO INCLUDE REMOVAL OF SERVICE WITHIN RIGHT-OF-WAY AND INSTALLATION OF CONCRETE CAP ON SERVICE LINE.
2. AREA TO BE REPAIRED AND REPLACED TO MATCH THE CONDITIONS OF SURROUNDING AREA.
3. ABANDONMENT REQUEST LETTER MUST BE SUBMITTED TO CASTLE ROCK WATER BILLING AND BE APPROVED BY ENGINEERING TO DISCONTINUE ACCOUNT.
4. PUBLIC WORKS PERMIT IS REQUIRED TO ABANDONED SERVICE.
5. ABANDONMENT OPTION TO BE DETERMINED BY PUBLIC WORKS INSPECTOR AND CASTLE ROCK WATER.
6. INTERNAL ABANDONMENT WITH CIPP LINING AS APPROVED BY CASTLE ROCK WATER. MINIMUM 4' SECTION OF LINING.

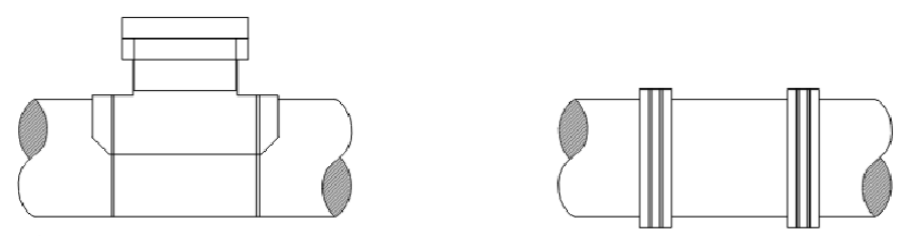

A.
FOR EXISTING SADDLE STRAP CONNECTION, PULL OUT EXISTING SERVICE AND INSTALL PLUG.

B.
REPLACE PIPE SECTION. CONNECTIONS SHOULD BE FERNCO STRONG BACK, CAULDER OR APPROVED EQUIVALENT. REPLACEMENT PIPE SHALL BE PVC SDR35 MIN. IF INSTALLED ON LARGE DIAMETER PIPE, FACTORY TRANSITION COUPLING MUST BE USED.

Sheet Revisions	
Date	Comments
3/20	REVISED PER STAFF COMMENTS

Town of Castle Rock
100 N. Wilcox St.
Castle Rock, CO 80104
Phone: (720) 733-2200
Fax: (720) 733-2217
Development Services

SEWER SERVICE LINE ABANDONMENT DETAIL
Issued By: Town of Castle Rock, Development Services January 1, 2023

DETAIL PLAN NO. SS-9 — Sheet 1 of 2

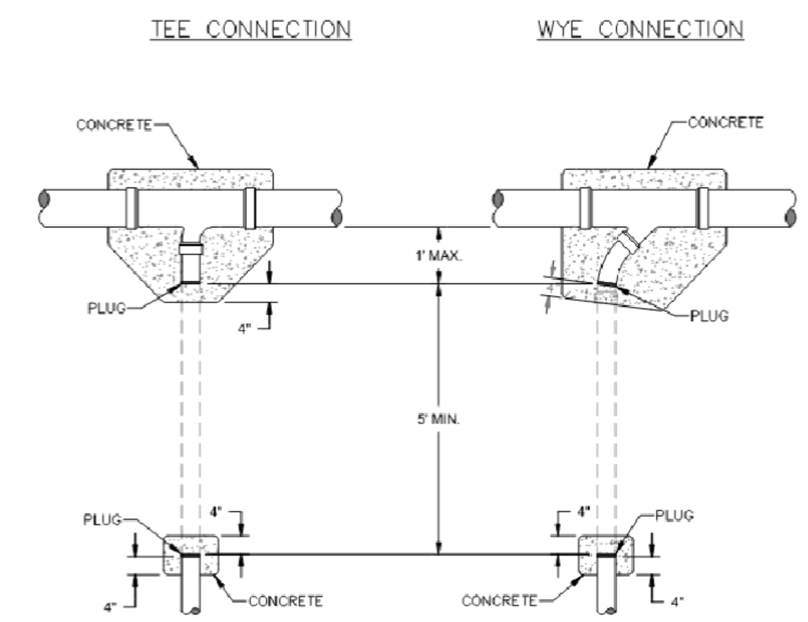

GENERAL NOTES:

1. REMOVE MINIMUM 5 FEET OF SERVICE PIPE. FIELD CUT SERVICE PIPE AT 1 FOOT MAXIMUM FROM OUTSIDE OF MAIN LINE.
2. INSTALL PLUGS AT CUT SERVICE CONNECTIONS AND POUR CONCRETE COLLAR 4 INCHES EACH SIDE OF PIPE END, 4 INCHES THICK.
3. POUR CONCRETE AROUND CUT SERVICE CONNECTIONS AND CONCRETE COLLAR TO SUPPORT WEIGHT.

Sheet Revisions	
Date	Comments
3/20	REVISED PER STAFF COMMENTS

Town of Castle Rock
100 N. Wilcox St.
Castle Rock, CO 80104
Phone: (720) 733-2200
Fax: (720) 733-2217
Development Services

SEWER SERVICE LINE ABANDONMENT DETAIL
Issued By: Town of Castle Rock, Development Services January 1, 2023

DETAIL PLAN NO. SS-10 — Sheet 2 of 2

NOTES:
1. CLEANOUT PIPE DIAMETER SHALL BE THE SAME SIZE AS THE SEWER LINE AT THE WYE.
2. SEWER IS NOT TO BE CONVEYED THROUGH CLEANOUT.
3. CLEANOUT IS FOR PRIVATE USE ONLY.
4. TRACER WIRE REQUIRED FOR ALL SEWER MAINS, LATERALS AND MANHOLES. REFER TO DETAILS SD-5, SS-2, SS-11, AND W-28.

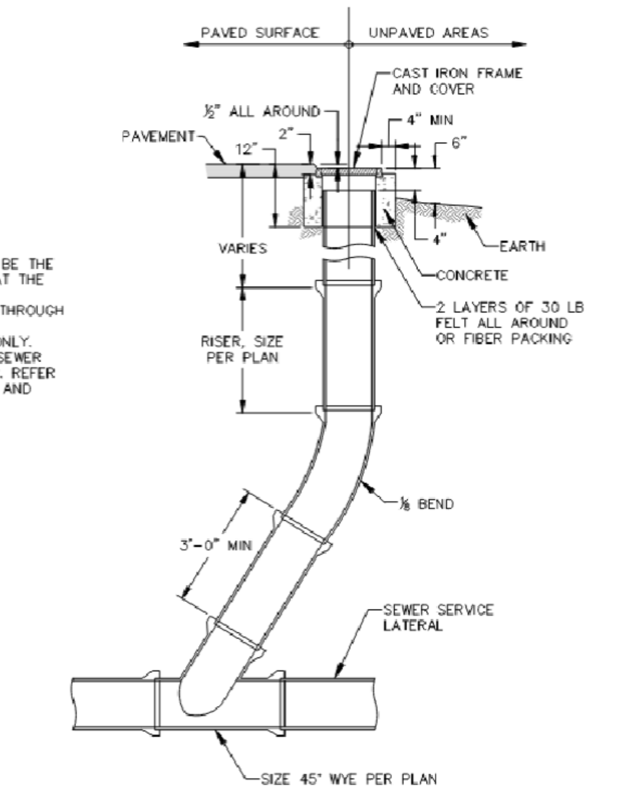

Sheet Revisions	
Date	Comments
3/20	REVISED PER STAFF COMMENTS

Town of Castle Rock
100 N. Wilcox St.
Castle Rock, CO 80104
Phone: (720) 733-2200
Fax: (720) 733-2217
Development Services

SEWER CLEANOUT
Issued By: Town of Castle Rock, Development Services January 1, 2023

DETAIL PLAN NO. SS-7 — Sheet 1 of 1

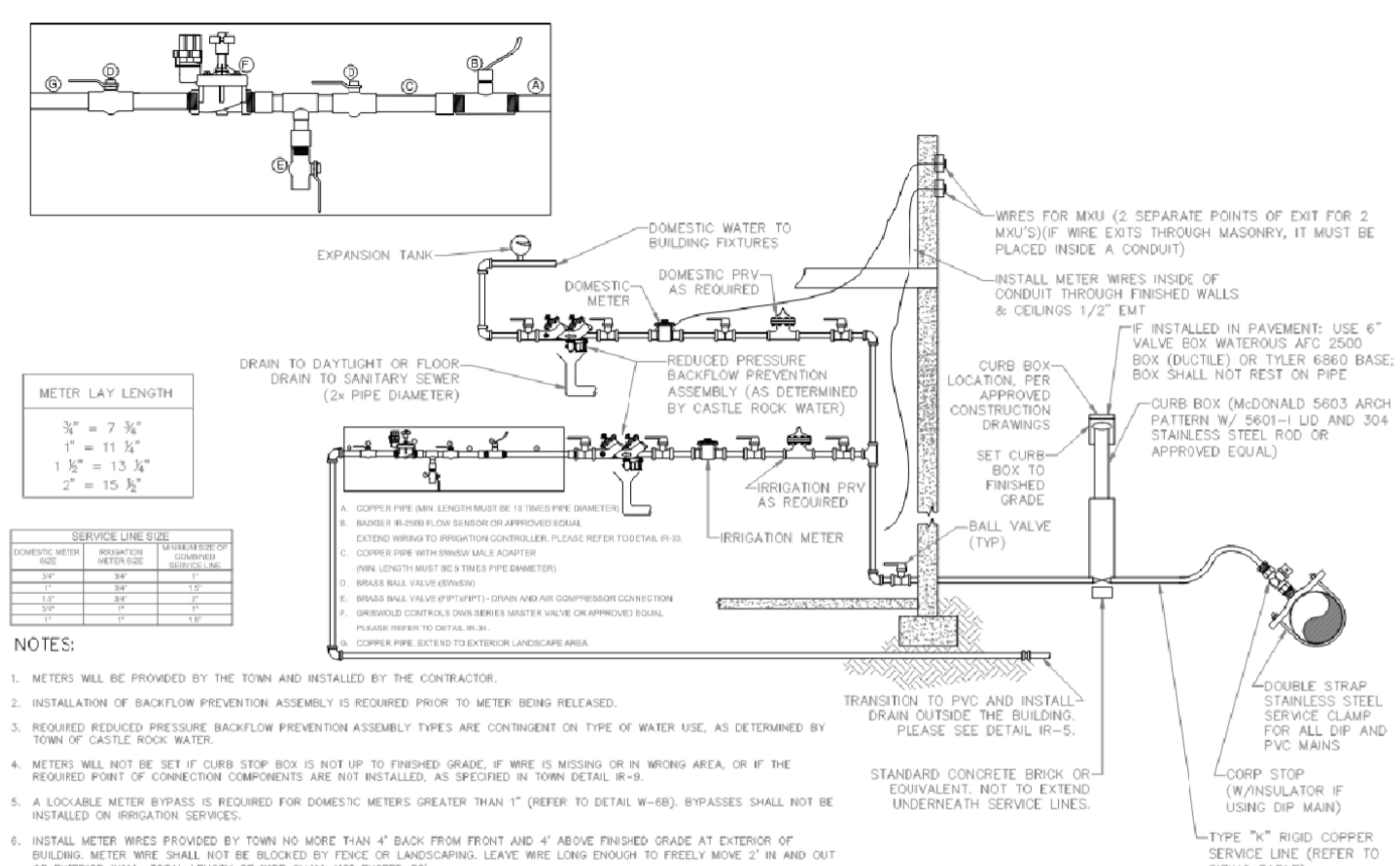

NOTES:

1. METERS WILL BE PROVIDED BY THE TOWN AND INSTALLED BY THE CONTRACTOR.
2. INSTALLATION OF BACKFLOW PREVENTION ASSEMBLY IS REQUIRED PRIOR TO METER BEING RELEASED.
3. REQUIRED REDUCED PRESSURE BACKFLOW PREVENTION ASSEMBLY TYPES ARE CONTINGENT ON TYPE OF WATER USE, AS DETERMINED BY TOWN OF CASTLE ROCK WATER.
4. METERS WILL NOT BE SET IF CURB STOP BOX IS NOT UP TO FINISHED GRADE, IF WIRE IS MISSING OR IN WRONG AREA, OR IF THE REQUIRED POINT OF CONNECTION COMPONENTS ARE NOT INSTALLED, AS SPECIFIED IN TOWN DETAIL IR-9.
5. A LOCKABLE METER BYPASS IS REQUIRED FOR DOMESTIC METERS GREATER THAN 1" (REFER TO DETAIL W-6B). BYPASSES SHALL NOT BE INSTALLED ON IRRIGATION SERVICES.
6. INSTALL METER WIRES PROVIDED BY TOWN NO MORE THAN 4' BACK FROM FRONT AND 4' ABOVE FINISHED GRADE AT EXTERIOR OF BUILDING. METER WIRE SHALL NOT BE BLOCKED BY FENCE OR LANDSCAPING. LEAVE WIRE LONG ENOUGH TO FREELY MOVE 2' IN AND OUT OF EXTERIOR WALL. TOTAL LENGTH OF WIRE SHALL NOT EXCEED 50'.
7. THIS DETAIL IS NOT SUITABLE FOR SENSITIVE INSTALLATIONS WHERE DOMESTIC SERVICE CANNOT BE INTERRUPTED. IN THE EVENT OF AN IRRIGATION WATER LEAK, CASTLE ROCK WATER RESERVES THE RIGHT TO SHUT OFF THE CURB STOP.

Sheet Revisions	
Date	Comments
10/22	NEW DETAIL

Town of Castle Rock
100 N. Wilcox St.
Castle Rock, CO 80104
Phone: (720) 733-2200
Fax: (720) 733-2217
Development Services

INSIDE COMMERCIAL DUAL METER; SINGLE SERVICE
Issued By: Town of Castle Rock, Development Services January 1, 2023

DETAIL PLAN NO. W-43B — Sheet 1 of 1

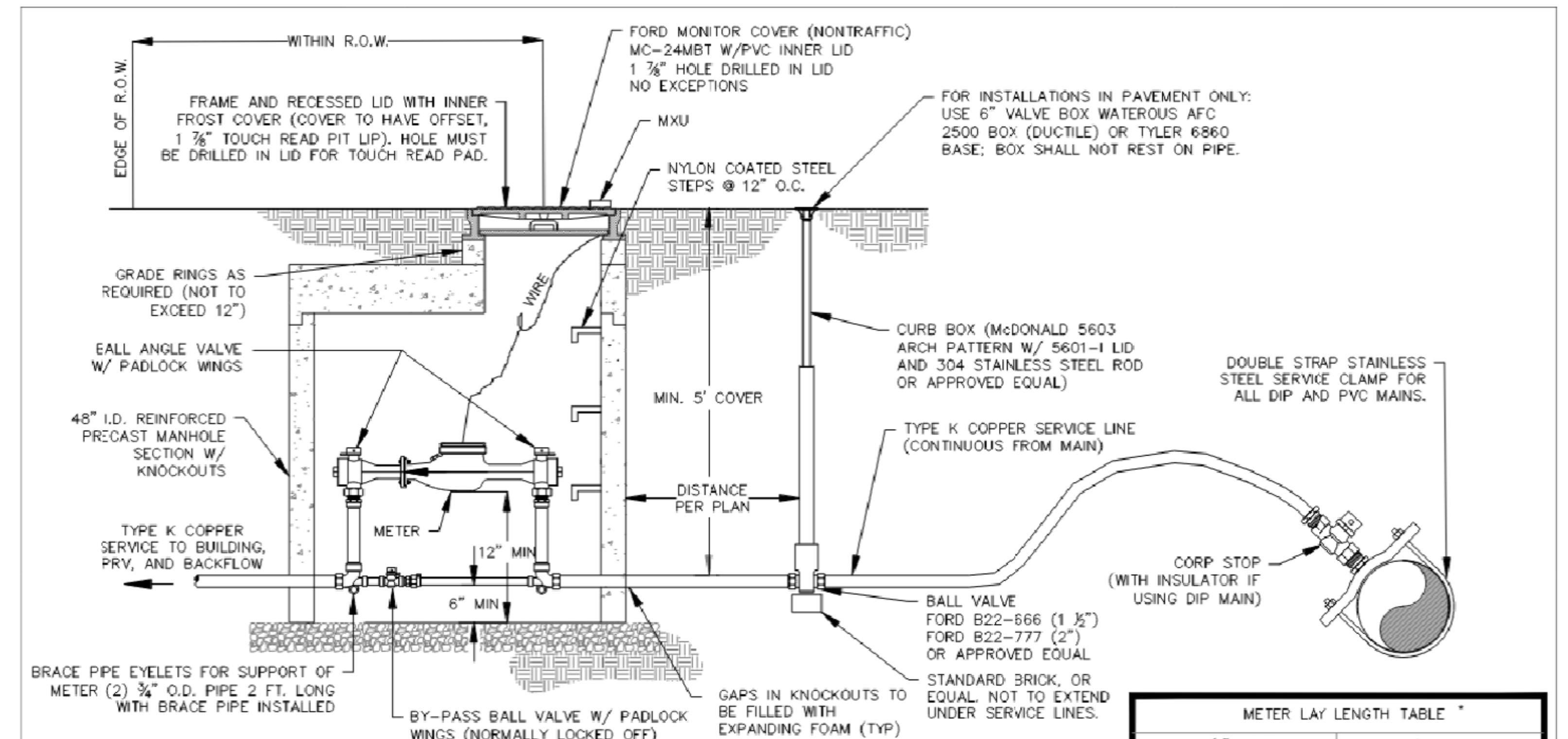

METER LAY LENGTH TABLE *	
1 ½" METER	2" METER
13 ¼"	15 ½"

*LENGTH INCLUDES TWO (2) ⅛" GASKETS

NOTES:
1. FLANGED METER AND WIRE SHALL BE SUPPLIED BY THE TOWN AND INSTALLED BY THE CONTRACTOR.
2. FORD 1 ½" CUSTOMSETTER 1 ½"-VBB76-12B-11-66-NL & C84-66QNL; 2" METER 2"-VBB77-12B-11-77-NL & C84-77QNL WITH BYPASS.
3. METER WILL NOT BE SET IF CURB STOP BOX IS NOT UP TO GRADE, IF WIRE IS IN THE WRONG AREA OR IF AN ASSEMBLY IS NOT IN PLACE.
4. THERMAL EXPANSION REQUIRED ON POTABLE SERVICES, NOT REQUIRED ON IRRIGATION SERVICES.
5. WHEN INSTALLING SENSUS OMNI METERS WITH STRAINER, A MINIMUM OF 2 ½ PIPE DIAMETERS OF STRAIGHT RUN PIPE OR EQUIVALENT FULL OPEN COMPONENTS IS REQUIRED UPSTREAM AND DOWNSTREAM OF THE METER OR STRAINER FLANGES. FULL OPEN FLOW COMPONENTS MAY CONSIST OF: STRAIGHT PIPE, FULL OPEN GATE VALVES, BYPASS TEES AND CONCENTRIC REDUCERS (1 NOMINAL PIPE SIZE REDUCTION ONLY). FOR ALL OTHER INSTALLATION CONFIGURATIONS, A MINIMUM OF 5 PIPE DIAMETERS OF STRAIGHT RUN IS REQUIRED UPSTREAM.
6. ALL COPPER PIPES REQUIRE A POLYWRAP SLEEVE TAPED DOWN AT BENDS AND AROUND CORP STOPS.
7. ALL SERVICES SHALL BE INSTALLED WITH BEDDING MATERIAL A MINIMUM OF 4" ABOVE AND BELOW THE PIPE.

Sheet Revisions	
Date	Comments
8/13	REVISED PER STAFF COMMENTS
3/20	REVISED PER STAFF COMMENTS
6/22	REVISED PER STAFF COMMENTS

Town of Castle Rock
100 N. Wilcox St.
Castle Rock, CO 80104
Phone: (720) 733-2200
Fax: (720) 733-2217
Development Services

1-1/2 INCH & 2 INCH POTABLE WATER SERVICES
Issued By: Town of Castle Rock, Development Services January 1, 2023

DETAIL PLAN NO. W-3 — Sheet 1 of 1

PROFESSIONAL ENGINEER CERTIFICATION

I HEREBY AFFIRM THAT THESE FINAL CONSTRUCTION PLANS WERE PREPARED UNDER MY DIRECT SUPERVISION, IN ACCORDANCE WITH ALL APPLICABLE TOWN OF CASTLE ROCK AND STATE OF COLORADO STANDARDS AND STATUTES, RESPECTIVELY; AND THAT I AM FULLY RESPONSIBLE FOR ALL DESIGN AND REVISIONS RELATIVE TO SAID PLANS.

STEPHEN M. DOUGLAS, P.E.
REGISTERED LICENSED PROFESSIONAL ENGINEER
STATE OF COLORADO No. 41176
FOR AND ON BEHALF OF
PERSONALIZED ENGINEERING SOLUTIONS, LLC
(720)388-8126

TOWN OF CASTLE ROCK APPROVAL
PLANS ARE HEREBY APPROVED FOR ONE YEAR FROM DATE OF DEVELOPMENT SERVICES APPROVAL

APPROVED BY:

DEVELOPMENT SERVICES

DATE	REVISION DESCRIPTION
MAR 14 2025	INITIAL CIVIL CD SUBMITTAL

CITY HOTEL
M1A — 6030 SMITH ROAD DENVER, CO 80216 MERIDIAN 105 ARCHITECTURE

Drawing Name: 09-12-DET_CD.dwg
Job Number: CITY HOTEL
Prepared For: WHITE DEVELOPMENT
Designer: SMD | Drafter: SN | Checked: SMD

Personalized Engineering Solutions, LLC
9249 S. Broadway #200-388
Highlands Ranch, CO 80129 720.388.8126
www.pengsolutions.com
Construction Management Civil Engineering Land Planning

CITY HOTEL, CASTLE ROCK
CONSTRUCTION DOCUMENTS
CIVIL SITE DETAILS

Sheet DET2 — 10 of 29
Date: MARCH 2025

PATH: PATH P:\WHITE DEV CITY HOTEL\CADD\CIVIL\CD\09-12-DET_CD.DWG
PLOTTED BY: S. DOUGLAS PLOT DATE: 3/14/2025 1:08 PM
XREFS: 10 BASE;10 EPN;10 EUT;10 LSBASE;10 PPN;10 PUT

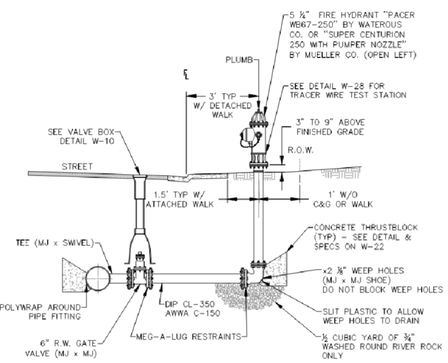

NOTES:

1. ALL HYDRANTS SHALL BE PAINTED "SAFETY YELLOW" FROM THE FACTORY. FIELD RE-PAINTING MAY BE REQUIRED BY THE PUBLIC WORKS INSPECTOR.
2. THE CONNECTIONS SHALL BE 2 TO 2 ½" NOZZLES AND 1 TO 5 ¼" PUMPER NOZZLE, ALL THREADS TO BE NATIONAL STANDARD W/ 1 ½" PENTAGONAL CAP NUTS. ALL HYDRANTS SHALL BE AWWA C-502-94 STANDARD OPEN LEFT.
3. NO TAPS SHALL BE ALLOWED BETWEEN THE HYDRANT & THE MAIN.
4. THE ENTIRE FIRE HYDRANT ASSEMBLY SHALL BE WRAPPED W/ 8 MIL POLYETHYLENE, INCLUDING THE RISER PORTION, TO FINISHED GRADE. CUT HOLE IN WRAP AT WEEP HOLE.
5. ALL FIRE HYDRANTS SHALL BE INSTALLED PLUMB & LOCATED ACCORDING TO PROJECT PLANS.
6. SEE FIRE HYDRANT LOCATION DETAILS W-13 & W-14 FOR PROPER LOCATION RELATIVE TO OTHER IMPROVEMENTS & REFER TO APPROVED PLANS.
7. THE MECHANICAL JOINTS OF THE FIRE HYDRANT ASSEMBLY SHALL BE RESTRAINED VIA MEG-A-LUG JOINT CLAMPS.
8. NO MORE THAN ONE HYDRANT EXTENSION, NOT TO EXCEED 24" MAY BE USED. OVERALL HEIGHT MAY NOT EXCEED 8'.
9. A TRACER WIRE TEST STATION IS REQUIRED; REFER TO DETAIL W-28.
10. FOR BURY DEPTHS GREATER THAN 8' REFER TO DETAIL W-11A.

TYPICAL JOINT RESTRAINT DETAIL FOR MULTIPLE JOINT ASSEMBLIES (NOT TO SCALE)

Sheet Revisions	
Date	Comments
7/19	REVISED PER STAFF COMMENTS
7/20	REVISED PER STAFF COMMENTS
6/22	REVISED PER STAFF COMMENTS

Town of Castle Rock
100 N. Wilcox St.
Castle Rock, CO 80104
Phone: (720) 733-2209
Fax: (720) 733-2217
Development Services

FIRE HYDRANT ASSEMBLY

Issued By: Town of Castle Rock, Development Services January 1, 2023

DETAIL PLAN NO.
W-11
Sheet 1 of 1

NOTES:

1. CARE SHALL BE TAKEN WHEN INSTALLING VALVES TO ASSURE PROPER SUPPORT OF THE VALVE. THE ENGINEER MAY REQUIRE 3/4" CRUSHED ROCK TO BE INSTALLED UNDER THE VALVE TO PROVIDE PROPER SUPPORT.
2. VALVES SHALL NOT BE PLACED IN CONCRETE CROSS PANS, GUTTERS, OR OTHER DRAINAGE WAYS.
3. OPERATING NUTS OR EXTENSIONS SHALL NOT BE SET CLOSER THAN THREE (3) FEET FROM FINISHED GRADE. IF OPERATING NUT IS DEEPER THAN FIVE (5) FEET FROM FINAL GRADE, PROVIDE A VALVE STEM EXTENSION (SEE DETAIL W-37).
4. GATE VALVE SHALL BE POLYETHYLENE WRAPPED (8 MIL).
5. CONCRETE COLLARS & MARKER POSTS ARE REQUIRED WHEN VALVE IS LOCATED IN AN UNPAVED AREA.
6. VALVE BOXES ARE TO BE BROUGHT UP TO GRADE @ THE TIME OF PAVEMENT PLACEMENT OR OVERLAY. VALVE BOX ADJUSTING RINGS ARE NOT ALLOWED.
7. INSTALL SOLID SLEEVE WITH MEGALUG MECHANICAL JOINT RESTRAINT.
8. NO TRACER WIRE ALLOWED INSIDE OF VALVE BOX. SHOULD HAVE SEPARATE MONUMENT STYLE VALVE BOX FOR TRACER WIRE (SEE DETAIL W-28).

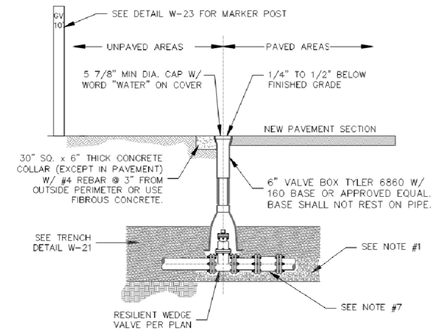

Sheet Revisions	
Date	Comments
12/15	NEW DETAIL
5/19	REVISED PER STAFF COMMENTS
5/20	REVISED PER STAFF COMMENTS
7/22	REVISED PER STAFF COMMENTS

Town of Castle Rock
100 N. Wilcox St.
Castle Rock, CO 80104
Phone: (720) 733-2209
Fax: (720) 733-2217
Development Services

GATE VALVE REPLACEMENT

Issued By: Town of Castle Rock, Development Services January 1, 2023

DETAIL PLAN NO.
W-30
Sheet 1 of 1

NOTES:

1. ALL TRENCHES SHALL BE BACKFILLED IN ACCORDANCE WITH THIS DETAIL UNLESS OTHERWISE SPECIFIED BY PUBLIC WORKS.
2. PRIOR TO PLACEMENT OF CONCRETE, ALL EDGES SHALL BE SAW CUT TO A CLEAN, STRAIGHT, AND VERTICAL EDGE.
3. PRIOR TO PLACEMENT OF ASPHALT, 18 INCHES OF ADJACENT ASPHALT SHALL BE MILLED TO 2 INCH DEPTH ON ALL SIDES TO MATCH EXISTING PAVEMENT. INNER SURFACE TO BE TACKED WITH HS2-1.
4. WHEN SUBSTITUTING FOR BACKFILL MATERIAL, FLOWABLE FILL SHALL CONFORM TO MGPEC CLSM STANDARDS.
5. TRENCH WIDTH SHALL NOT BE MORE THAN 16" NOR LESS THAN 12" WIDER THAN THE DIAMETER OF THE PIPE.
6. 95% OF ASTM D698 STANDARD COMPACTION EFFORT IS REQUIRED ON ALL TRENCHING ZONES, IN BOTH IMPROVED & UNIMPROVED AREAS.
7. IN UNIMPROVED AREAS, ALL DISTURBED AREAS SHALL BE REGRADED, SEEDED & MULCHED.
8. IN CONCRETE ROADWAYS, A MINIMUM OF 1/2 PANEL WIDTH OR 10' x 5' SECTION WILL BE ALLOWED TO REMAIN, OTHERWISE THE ENTIRE CONCRETE PANEL MUST BE REPLACED.
9. USE #4 REBAR AT 2' CENTERS ALONG THE PERIMETER OF CONCRETE REPLACEMENT SECTIONS.
10. 6" MAXIMUM COMPACTED LIFT THICKNESS IF FLOWABLE FILL NOT REQUIRED.
11. BEDDING MATERIAL DEPTH WHEN INSTALLING STORM SEWER SHALL BE UP TO SPRING LINE, EXCEPT IN AREAS OF UNSUITABLE BACKFILL, THEN BEDDING MATERIAL SHALL BE 12" ABOVE PIPE.
12. TRENCH WIDTHS LESS THAN 4' OR TRENCHING THAT EXPERIENCES CAVE-INS OR SLOUGHING SHALL REQUIRE FLOWABLE FILL IN ORDER TO ACHIEVE COMPACTION.

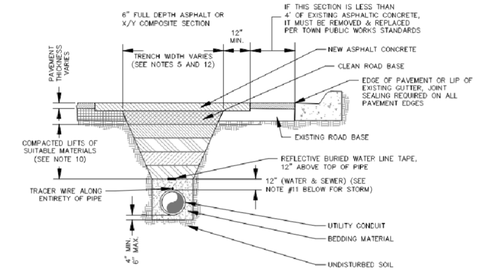

Sheet Revisions	
Date	Comments
7/19	REVISED PER STAFF COMMENTS
7/20	REVISED PER STAFF COMMENTS

Town of Castle Rock
100 N. Wilcox St.
Castle Rock, CO 80104
Phone: (720) 733-2209
Fax: (720) 733-2217
Development Services

WATER TRENCH DETAIL

Issued By: Town of Castle Rock, Development Services January 1, 2023

DETAIL PLAN NO.
W-21
Sheet 1 of 1

NOTES:

1. ABANDONMENT TO INCLUDE REMOVAL OF ALL RELATED FIXTURES INCLUDING, BUT NOT LIMITED TO, ALL SECTIONS OF CONCRETE METER PIT, TOP BONNET INCLUDING LID AND INNER LID, METER YOKE, COPPER LINE FROM MAIN TO INTERIOR OF METER PIT, ALL VALVES, AND VALVE BOXES.
2. METER WILL BE REMOVED BY A REPRESENTATIVE OF CASTLE ROCK WATER.
3. AFTER INITIAL ACCEPTANCE, ALL EQUIPMENT BECAME THE PROPERTY OF THE TOWN OF CASTLE ROCK. ALL REMOVED EQUIPMENT WILL BE RETURNED TO THE TOWN UNLESS DEEMED TO BE NO LONGER USABLE OR IS DESTROYED IN THE PROCESS OF REMOVAL, AS DETERMINED BY TOWN OF CASTLE ROCK REPRESENTATIVE.
4. CORPORATION STOP ON MAIN WILL BE SHUT-OFF AND ABANDONED PIPING REMOVED.
5. A PLUGGING DEVICE WILL BE ADDED TO THE CORPORATION STOP TO PREVENT ANY LEAKING THAT MAY OCCUR IN THE EVENT THAT THE CORPORATION STOP FAILS AFTER IT HAS BEEN ABANDONED.
6. AREA TO BE REPAIRED AND REPLACED TO MATCH THE CONDITIONS OF SURROUNDING AREA.
7. IN SOME INSTANCES, CORPORATION STOPS MAY BE FOUND THAT WERE DIRECTLY TAPPED INTO THE MAIN LINE WITHOUT A SADDLE. IN THESE INSTANCES IT MAY BE REQUIRED TO REMOVE THE CORPORATION STOP AND INSTALL A SADDLE WITH A NEW CORPORATION OVER THE HOLE. DEPENDING ON THE INTEGRITY OF THE EXISTING MAIN, A STAINLESS REPAIR CLAMP MAY BE REQUIRED IN PLACE OF A SADDLE, AT DISCRETION OF THE TOWN REPRESENTATIVE.
8. CROSS CONNECTION CONTROL TECHNICIAN FOR THE TOWN SHALL BE NOTIFIED OF ANY SERIAL NUMBERS OF BACK FLOW PREVENTION DEVICES REMOVED FROM SERVICE.
9. ABANDONMENT REQUEST LETTER MUST BE SUBMITTED TO CASTLE ROCK WATER BILLING TO DISCONTINUE ACCOUNT.

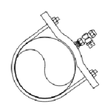

WATERTIGHT BRASS END CAP, SUCH AS FORD CAP-24-3-NL 3/4" FLARE OR COMPRESSION, OR APPROVED EQUAL.

A.
FOR EXISTING SADDLE, ADD PLUG (AND BUSHING IF NEEDED) TO THE EXISTING CORPORATION STOP.

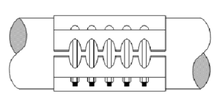

B.
FOR DIRECT TAP, REMOVE ENTIRE CORPORATION STOP AND TAP AND USE A 12-INCH LONG STAINLESS STEEL REPAIR CLAMP (FORD FS1 OR EQUIVALENT) CENTERED OVER THE REMAINING HOLE.

Sheet Revisions	
Date	Comments
5/19	REVISED PER STAFF COMMENTS
5/20	REVISED PER STAFF COMMENTS
11/21	REVISED PER STAFF COMMENTS

Town of Castle Rock
100 N. Wilcox St.
Castle Rock, CO 80104
Phone: (720) 733-2209
Fax: (720) 733-2217
Development Services

WATER SERVICE LINE ABANDONMENT DETAIL

Issued By: Town of Castle Rock, Development Services January 1, 2023

DETAIL PLAN NO.
W-27
Sheet 1 of 1

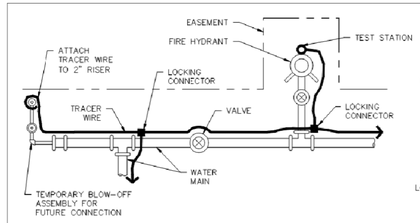

TRACER WIRE SAMPLE PLAN

NOTES:

1. REFER TO STANDARD NOTES FOR TOWN OF CASTLE ROCK GENERAL TRACER WIRE REQUIREMENTS. FOR TEST STATION AT MANHOLE, REFER TO DETAIL SD-5.
2. TRACER WIRE AND TEST STATION LIDS SHALL BE BLUE FOR POTABLE WATER DISTRIBUTION SYSTEM AND PURPLE FOR RECLAIMED OR RAW WATER COMPONENTS.
3. TRACER WIRE IN PLAN IS SHOWN AWAY FROM PIPE FOR CLARITY. TRACER WIRE SHALL BE FASTENED TO THE PIPE WITH TAPE OR PLASTIC TIES AT 5-FOOT INTERVALS.
4. TRACER WIRE SHALL BE LAID CONTINUOUSLY, PASSING AROUND THE OUTSIDE OF VALVES AND FITTINGS ON THE NORTH OR EAST SIDE.
5. TEST STATIONS SHALL BE INSTALLED AT EVERY FIRE HYDRANT, AS SHOWN, OR AT A MINIMUM INTERVAL OF 500 FEET. TEST STATIONS NOT LOCATED NEAR HYDRANTS MUST BE PLACED BEHIND EDGE OF PAVEMENT.
6. AT ALL TEMPORARY BLOW-OFFS, THE END OF THE TRACER WIRE SHALL BE CONTAINED WITHIN A CORROSION PREVENTION CAP, THEN BROUGHT TO SURFACE AND ATTACHED TO THE RISER PIPE AT GRADE WITHIN THE EASEMENT OR R.O.W.
7. TEST STATIONS SHALL LIE WITHIN UTILITY EASEMENT OR PUBLIC R.O.W.
8. PROVIDE ADEQUATE LENGTH OF TRACER WIRE TO EXTEND 12 INCHES ABOVE GRADE.
9. TEST STATIONS NOT LOCATED AT A FIRE HYDRANT MUST BE AT GRADE WITH LOCKING LID.

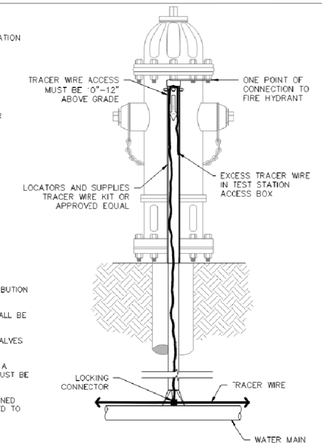

FIRE HYDRANT TRACER WIRE DETAIL

Sheet Revisions	
Date	Comments
5/19	REVISED PER STAFF COMMENTS
5/20	REVISED PER STAFF COMMENTS
7/22	REVISED PER STAFF COMMENTS

Town of Castle Rock
100 N. Wilcox St.
Castle Rock, CO 80104
Phone: (720) 733-2209
Fax: (720) 733-2217
Development Services

TRACER WIRE DETAIL

Issued By: Town of Castle Rock, Development Services January 1, 2023

DETAIL PLAN NO.
W-28
Sheet 1 of 1

PROFESSIONAL ENGINEER CERTIFICATION

I HEREBY AFFIRM THAT THESE FINAL CONSTRUCTION PLANS WERE PREPARED UNDER MY DIRECT SUPERVISION, IN ACCORDANCE WITH ALL APPLICABLE TOWN OF CASTLE ROCK AND STATE OF COLORADO STANDARDS AND STATUTES, RESPECTIVELY; AND THAT I AM FULLY RESPONSIBLE FOR ALL DESIGN AND REVISIONS RELATIVE TO SAID PLANS.

STEPHEN M. DOUGLAS, P.E.
REGISTERED LICENSED PROFESSIONAL ENGINEER
STATE OF COLORADO No. 41176
FOR AND ON BEHALF OF
PERSONALIZED ENGINEERING SOLUTIONS, LLC
(720)388-8126

TOWN OF CASTLE ROCK APPROVAL
PLANS ARE HEREBY APPROVED FOR ONE YEAR FROM DATE OF DEVELOPMENT SERVICES APPROVAL

APPROVED BY:

DEVELOPMENT SERVICES

DATE	REVISION DESCRIPTION
MAR 14 2025	INITIAL CIVIL CD SUBMITTAL

CITY HOTEL
M1A 8030 SMITH ROAD DENVER, CO 80239 MERIDIAN 105 ARCHITECTURE

Drawing Name: 09-12-DET_CD.dwg			
Job Number: CITY HOTEL			
Prepared For: WHITE DEVELOPMENT	Designer: SMD	Drafter: SN	Checked: SMD

Personalized Engineering Solutions
Personalized Engineering Solutions, LLC
9249 S. Broadway #200-388
Highlands Ranch, CO 80129 720.388.8126
www.pengsolutions.com
Construction Management Civil Engineering Land Planning

CITY HOTEL, CASTLE ROCK
CONSTRUCTION DOCUMENTS
CIVIL SITE DETAILS

Sheet DET3 11 of 29

Date MARCH 2025

PATH: PATH P:\WHITE DEV CITY HOTEL\CADD\CIVIL\CD\09-12-DET_CD.DWG
PLOTTED BY: S. DOUGLAS PLOT DATE: 3/14/2025 1:08 PM
XREFS: 10 BASE;10 EPN;10 EUT;10 LSBASE;10 PPN;10 PUT

NOTES:

1. ALL TRENCHES SHALL BE BACKFILLED IN ACCORDANCE WITH THIS DETAIL UNLESS OTHERWISE SPECIFIED BY PUBLIC WORKS.
2. PRIOR TO PLACEMENT OF CONCRETE, ALL EDGES SHALL BE SAW CUT TO A CLEAN, STRAIGHT, AND VERTICAL EDGE.
3. PRIOR TO PLACEMENT OF ASPHALT, 18 INCHES OF ADJACENT ASPHALT SHALL BE MILLED TO 2 INCH DEPTH ON ALL SIDES TO MATCH EXISTING PAVEMENT. INNER SURFACE TO BE TACKED WITH HSS-1.
4. WHEN SUBSTITUTING FOR BACKFILL MATERIAL, FLOWABLE FILL SHALL CONFORM TO MGPEC CLSM STANDARDS.
5. TRENCH WIDTH SHALL NOT BE MORE THAN 16" NOR LESS THAN 12" WIDER THAN THE DIAMETER OF THE PIPE.
6. 95% OF ASTM D698 STANDARD COMPACTION EFFORT IS REQUIRED ON ALL TRENCHING ZONES, IN BOTH IMPROVED & UNIMPROVED AREAS.
7. IN UNIMPROVED AREAS, ALL DISTURBED AREAS SHALL BE REGRADED, SEEDED & MULCHED.
8. IN CONCRETE ROADWAYS, A MINIMUM OF 1/2 PANEL WIDTH OR 10' x 5' SECTION WILL BE ALLOWED TO REMAIN, OTHERWISE THE ENTIRE CONCRETE PANEL MUST BE REPLACED.
9. USE #4 REBAR AT 2' CENTERS ALONG THE PERIMETER OF CONCRETE REPLACEMENT SECTIONS.
10. 6" MAXIMUM COMPACTED LIFT THICKNESS IF FLOWABLE FILL NOT REQUIRED.
11. BEDDING MATERIAL DEPTH WHEN INSTALLING STORM SEWER SHALL BE UP TO SPRING LINE, EXCEPT IN AREAS OF UNSUITABLE BACKFILL, THEN BEDDING MATERIAL SHALL BE 12" ABOVE PIPE.
12. TRENCH WIDTHS LESS THAN 4' OR TRENCHING THAT EXPERIENCES CAVE-INS OR SLOUGHING SHALL REQUIRE FLOWABLE FILL IN ORDER TO ACHIEVE COMPACTION.

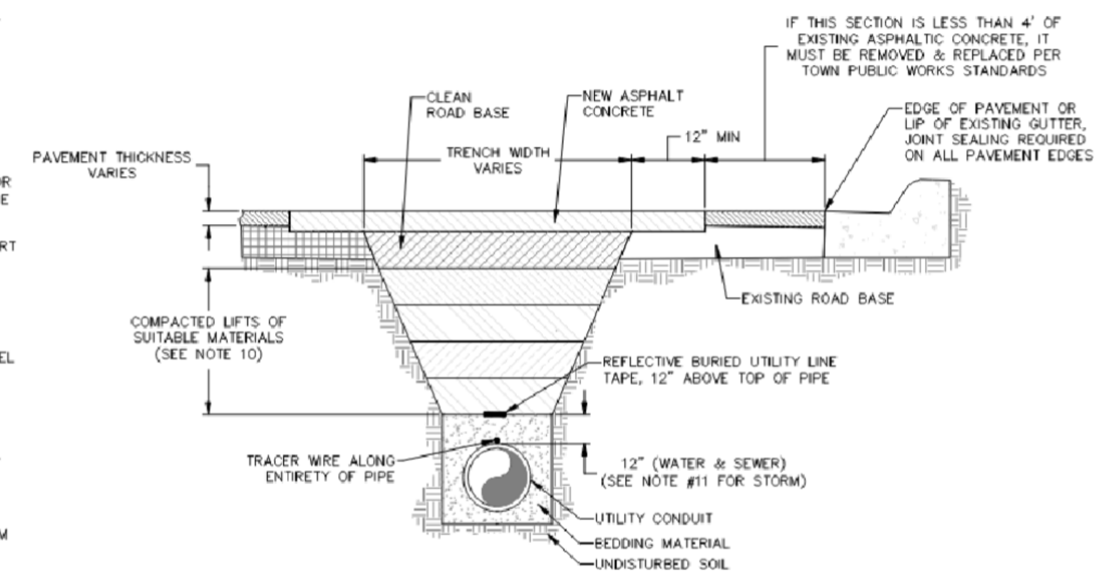

Sheet Revisions	
Date	Comments
3/20	REVISED PER STAFF COMMENTS
8/22	REVISED PER STAFF COMMENTS

Town of Castle Rock
100 N. Wilcox St.
Castle Rock, CO 80104
Phone: (720) 733-2200
Fax: (720) 733-2217
Development Services

STORM SEWER
TRENCH DETAIL

Issued By: Town of Castle Rock, Development Services January 1, 2023

DETAIL PLAN NO.
SD-2
Sheet 1 of 1

NYLOPLAST 15" INLINE DRAIN: 2715AG _ _ X

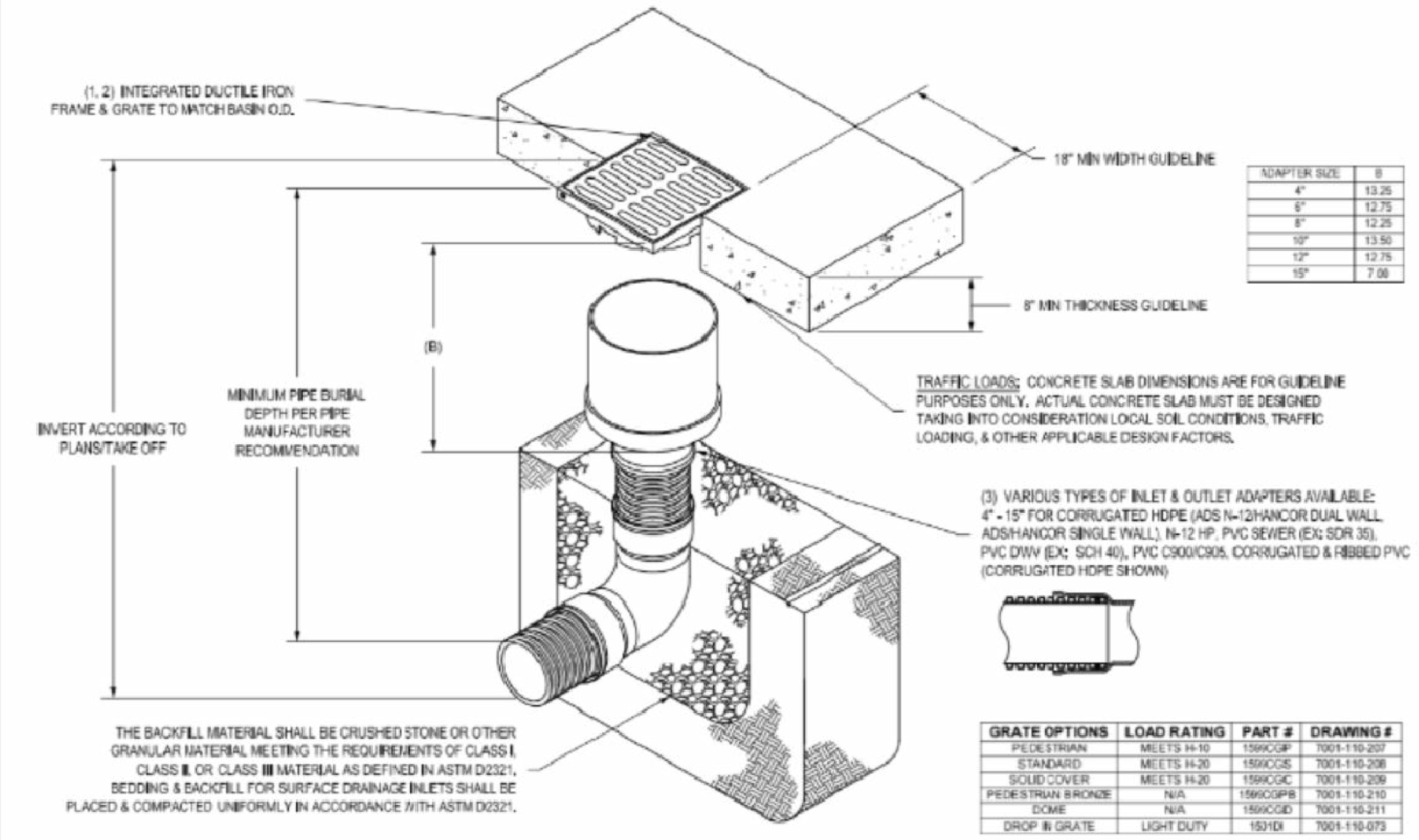

ADAPTER SIZE	B
4"	13.25
6"	12.75
8"	12.25
10"	13.50
12"	12.75
15"	7.00

GRATE OPTIONS	LOAD RATING	PART #	DRAWING #
PEDESTRIAN	MEETS H-10	1599CGP	7001-110-207
STANDARD	MEETS H-20	1599CGS	7001-110-208
SOLID COVER	MEETS H-20	1599CGC	7001-110-209
PEDESTRIAN BRONZE	N/A	1599CGPB	7001-110-210
DOME	N/A	1599CGD	7001-110-211
DROP IN GRATE	LIGHT DUTY	1501DI	7001-110-073

1 - GRATES/SOLID COVER SHALL BE DUCTILE IRON PER ASTM A536 GRADE 70-50-05, WITH THE EXCEPTION OF THE BRONZE GRATE.
2 - FRAMES SHALL BE DUCTILE IRON PER ASTM A536 GRADE 70-50-05.
3 - DRAINAGE CONNECTION STUB JOINT TIGHTNESS SHALL CONFORM TO ASTM D3212 FOR CORRUGATED HDPE (ADS N-12/HANCOR DUAL WALL), N-12 HP, & PVC SEWER.
4 - DIMENSIONS ARE FOR REFERENCE ONLY. ACTUAL DIMENSIONS MAY VARY.
5 - DIMENSIONS ARE IN INCHES
6 - SEE DRAWING NO. 7001-110-275 FOR ADS N-12 & HANCOR DUAL WALL BELL INFORMATION & DRAWING NO. 7001-110-384 FOR N-12 HP BELL INFORMATION.

THIS PRINT DISCLOSES SUBJECT MATTER IN WHICH NYLOPLAST HAS PROPRIETARY RIGHTS. THE RECEIPT OR POSSESSION OF THIS PRINT DOES NOT CONFER, TRANSFER, OR LICENSE THE USE OF THE DESIGN OR TECHNICAL INFORMATION SHOWN HEREIN REPRODUCTION OF THIS PRINT OR ANY INFORMATION CONTAINED HEREIN, OR MANUFACTURE OF ANY ARTICLE HEREFROM, FOR THE DISCLOSURE TO OTHERS IS FORBIDDEN, EXCEPT BY SPECIFIC WRITTEN PERMISSION FROM NYLOPLAST. ©2013 NYLOPLAST

DRAWN BY EBC | DATE 04-03-06 | REVISED BY NMH | DATE 02-15-16 | DWG SIZE A | SCALE 1:20 | SHEET 1 OF 1 | MATERIAL | PROJECT NO./NAME

Nyloplast 3130 VERONA AVE, BUFORD, GA 30518, PHN (770) 932-2443, FAX (770) 932-2490, www.nyloplast-us.com

TITLE: 15 IN INLINE DRAIN QUICK SPEC INSTALLATION DETAIL
DWG NO. 7003-110-026 REV E

NYLOPLAST TURF TRAFFIC INSTALLATION

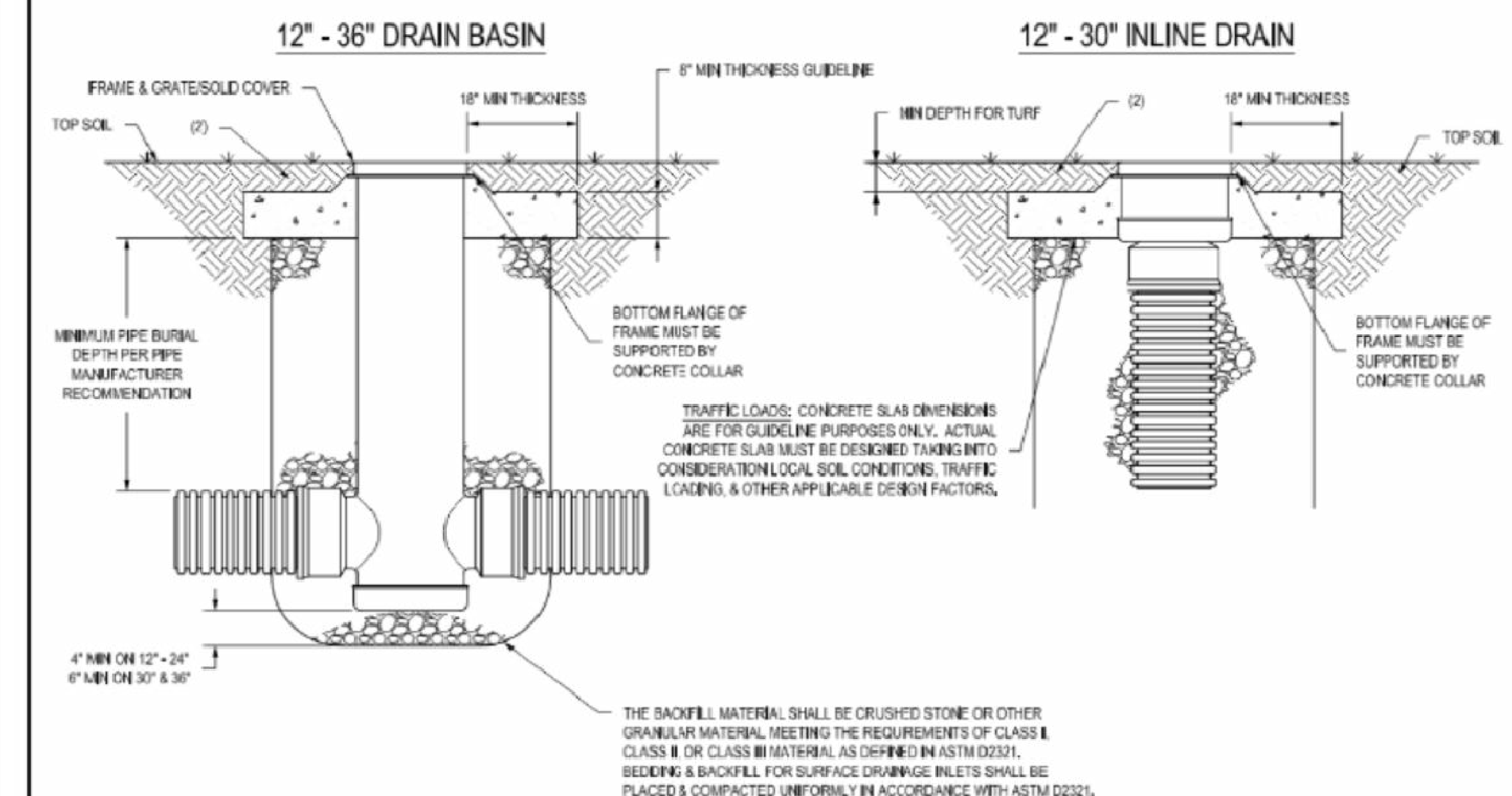

1. GRATES/SOLID COVERS SHALL MEET H-20 LOAD RATING FOR 30" PEDESTRIAN & 12" - 30" STANDARD & SOLID
2. DESIGN SHOULD ACCOUNT FOR ROOT DEPTH TO ALLOW TURF TO GROW AND PREVENT EROSION AROUND GRATE SO THAT HAZARDS DO NOT FORM.

THIS PRINT DISCLOSES SUBJECT MATTER IN WHICH NYLOPLAST HAS PROPRIETARY RIGHTS. THE RECEIPT OR POSSESSION OF THIS PRINT DOES NOT CONFER, TRANSFER, OR LICENSE THE USE OF THE DESIGN OR TECHNICAL INFORMATION SHOWN HEREIN REPRODUCTION OF THIS PRINT OR ANY INFORMATION CONTAINED HEREIN, OR MANUFACTURE OF ANY ARTICLE HEREFROM, FOR THE DISCLOSURE TO OTHERS IS FORBIDDEN, EXCEPT BY SPECIFIC WRITTEN PERMISSION FROM NYLOPLAST.

DRAWN BY EBC | DATE 01-05-09 | REVISED BY NMH | DATE 06-12-18 | DWG SIZE A | SCALE 1:25 | SHEET 1 OF 1 | MATERIAL | PROJECT NO./NAME

Nyloplast 3130 VERONA AVE, BUFORD, GA 30518, PHN (770) 932-2443, FAX (770) 932-2490, www.nyloplast-us.com

TITLE: DRAIN BASIN & INLINE DRAIN TURF TRAFFIC INSTALLATION
DWG NO. 700-110-340 REV G

1599CGC

APPROX. WEIGHT WITH FRAME = 59.00 LBS

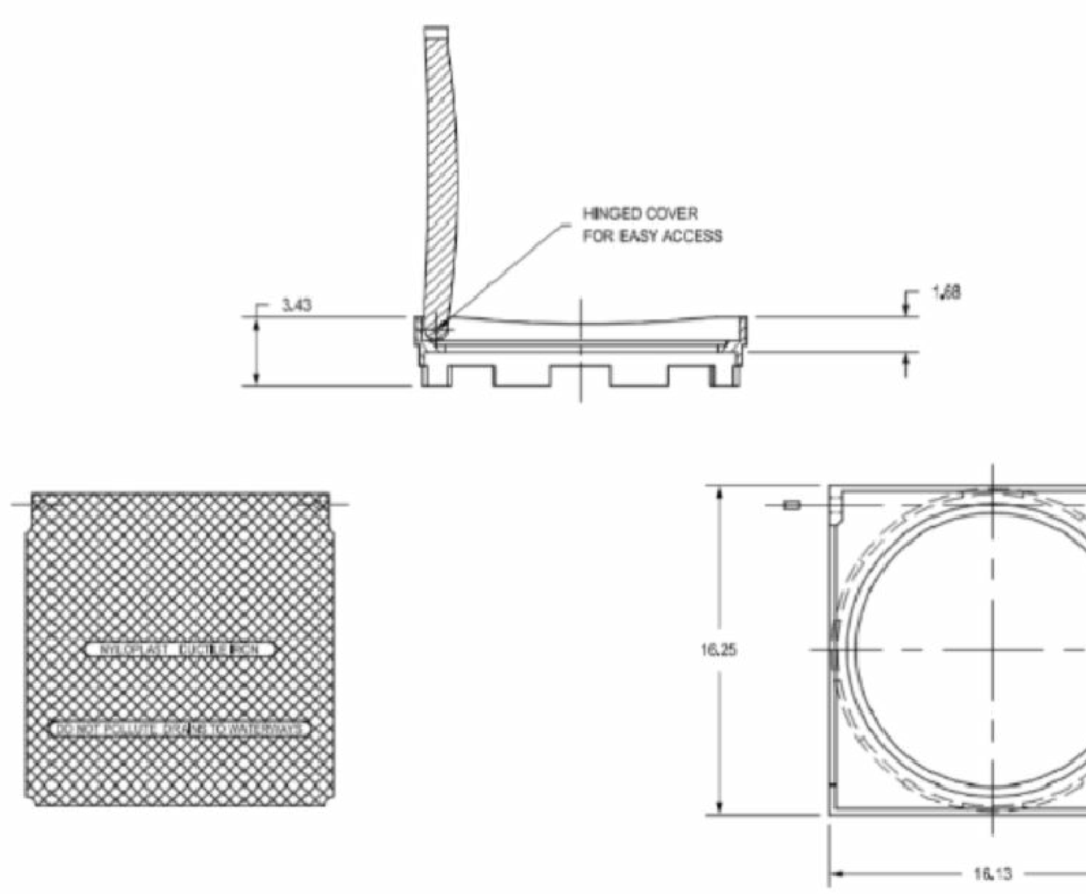

DIMENSIONS ARE FOR REFERENCE ONLY
ACTUAL DIMENSIONS MAY VARY
DIMENSIONS ARE IN INCHES
GRATE MEETS H-20 LOAD RATING
QUALITY: MATERIALS SHALL CONFORM TO ASTM A536 GRADE 70-50-05
PAINT: CASTINGS ARE FURNISHED WITH A BLACK PAINT
LOCKING DEVICE AVAILABLE UPON REQUEST SEE DRAWING NO. 7001-110-030

THIS PRINT DISCLOSES SUBJECT MATTER IN WHICH NYLOPLAST HAS PROPRIETARY RIGHTS. THE RECEIPT OR POSSESSION OF THIS PRINT DOES NOT CONFER, TRANSFER, OR LICENSE THE USE OF THE DESIGN OR TECHNICAL INFORMATION SHOWN HEREIN REPRODUCTION OF THIS PRINT OR ANY INFORMATION CONTAINED HEREIN, OR MANUFACTURE OF ANY ARTICLE HEREFROM, FOR THE DISCLOSURE TO OTHERS IS FORBIDDEN, EXCEPT BY SPECIFIC WRITTEN PERMISSION FROM NYLOPLAST.

DRAWN BY EBC | DATE 3-7-06 | REVISED BY EBC | DATE 3-16-10 | DWG SIZE A | SCALE 1:8 | SHEET 1 OF 1 | MATERIAL DUCTILE IRON | PROJECT NO./NAME

Nyloplast 3130 VERONA AVE, BUFORD, GA 30518, PHN (770) 932-2443, FAX (770) 932-2490, www.nyloplast-us.com

TITLE: 15 IN SOLID COVER ASSEMBLY
DWG NO. 7001-110-209 REV C

1599CGP

APPROX. DRAIN AREA = 81.25 SQ IN
APPROX. WEIGHT WITH FRAME = 53.70 LBS

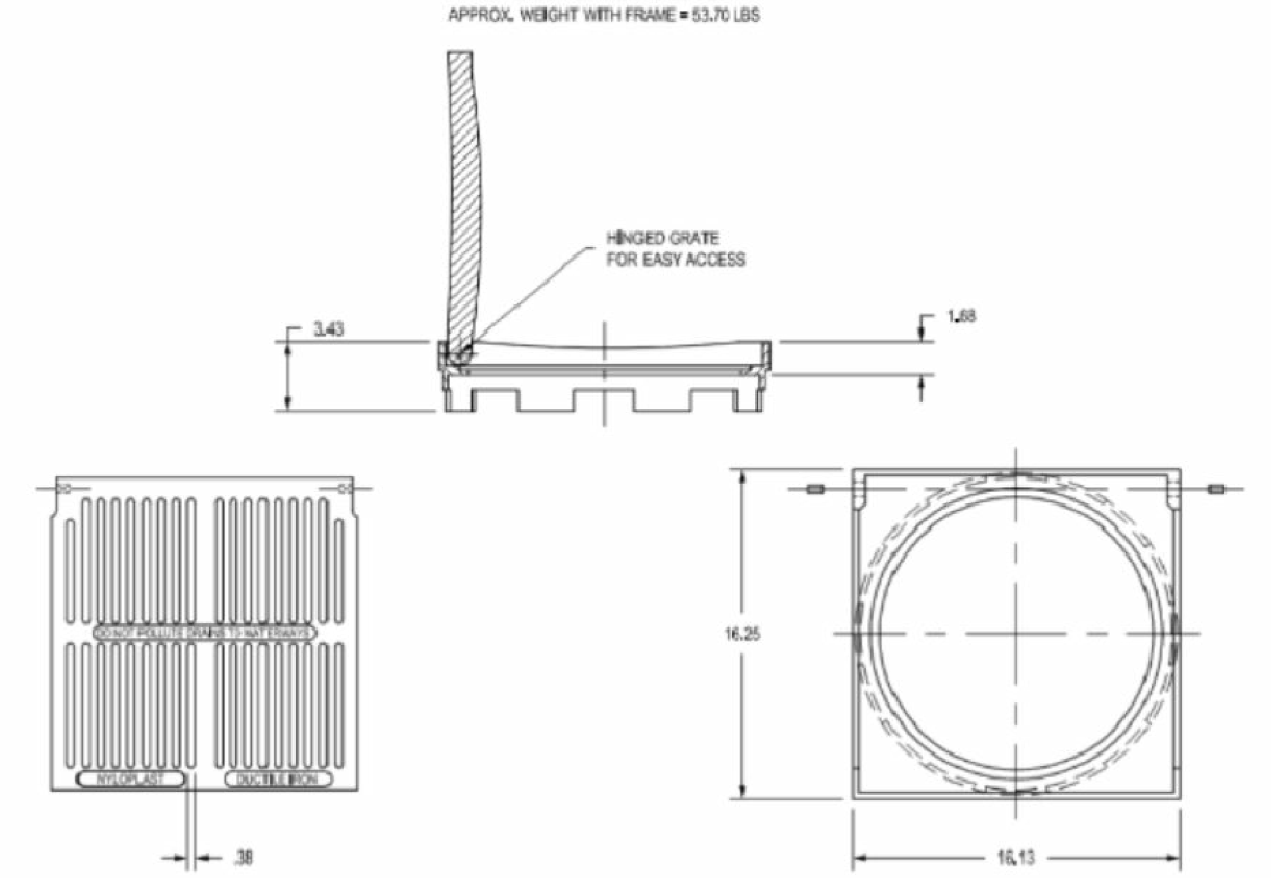

DIMENSIONS ARE FOR REFERENCE ONLY
ACTUAL DIMENSIONS MAY VARY
DIMENSIONS ARE IN INCHES
GRATE MEETS H-10 LOAD RATING
QUALITY; MATERIALS SHALL CONFORM TO ASTM A536 GRADE 70-50-05
PAINT: CASTINGS ARE FURNISHED WITH A BLACK PAINT
SIZE OF OPENING MEETS REQUIREMENTS OF AMERICAN DISABILITY ACT AS STATED IN FEDERAL REGISTER PART III, DEPARTMENT OF JUSTICE, 28 CFR PART 36.
LOCKING DEVICE AVAILABLE UPON REQUEST SEE DRAWING NO. 7001-110-031

THIS PRINT DISCLOSES SUBJECT MATTER IN WHICH NYLOPLAST HAS PROPRIETARY RIGHTS. THE RECEIPT OR POSSESSION OF THIS PRINT DOES NOT CONFER, TRANSFER, OR LICENSE THE USE OF THE DESIGN OR TECHNICAL INFORMATION SHOWN HEREIN REPRODUCTION OF THIS PRINT OR ANY INFORMATION CONTAINED HEREIN, OR MANUFACTURE OF ANY ARTICLE HEREFROM, FOR THE DISCLOSURE TO OTHERS IS FORBIDDEN, EXCEPT BY SPECIFIC WRITTEN PERMISSION FROM NYLOPLAST.

DRAWN BY EBC | DATE 3-7-06 | REVISED BY EBC | DATE 3-13-10 | DWG SIZE A | SCALE 1:8 | SHEET 1 OF 1 | MATERIAL DUCTILE IRON | PROJECT NO./NAME

Nyloplast 3130 VERONA AVE, BUFORD, GA 30518, PHN (770) 932-2443, FAX (770) 932-2490, www.nyloplast-us.com

TITLE: 15 IN PEDESTRIAN GRATE ASSEMBLY
DWG NO. 7001-110-207 REV C

PROFESSIONAL ENGINEER CERTIFICATION

I HEREBY AFFIRM THAT THESE FINAL CONSTRUCTION PLANS WERE PREPARED UNDER MY DIRECT SUPERVISION, IN ACCORDANCE WITH ALL APPLICABLE TOWN OF CASTLE ROCK AND STATE OF COLORADO STANDARDS AND STATUTES, RESPECTIVELY; AND THAT I AM FULLY RESPONSIBLE FOR ALL DESIGN AND REVISIONS RELATIVE TO SAID PLANS.

STEPHEN M. DOUGLAS, P.E.
REGISTERED LICENSED PROFESSIONAL ENGINEER
STATE OF COLORADO No. 41176
FOR AND ON BEHALF OF
PERSONALIZED ENGINEERING SOLUTIONS, LLC
(720)388-8126

TOWN OF CASTLE ROCK APPROVAL
PLANS ARE HEREBY APPROVED FOR ONE YEAR FROM DATE OF DEVELOPMENT SERVICES APPROVAL

APPROVED BY:

DEVELOPMENT SERVICES

PATH: PATH P:\WHITE DEV CITY HOTEL\CADD\CIVIL\CD\09-12-DET_CD.DWG
PLOTTED BY: S. DOUGLAS PLOT DATE: 3/14/2025 1:09 PM
XREFS: 10 BASE;10 EPN;10 EUT;10 LSBASE;10 PPN;10 PUT

DATE	REVISION DESCRIPTION
MAR 14 2025	INITIAL CIVIL CD SUBMITTAL

CITY HOTEL
M1A 6030 SMITH ROAD DENVER, CO 80216 MERIDIAN 105 ARCHITECTURE

Drawing Name: 09-12-DET_CD.dwg
Job Number: CITY HOTEL
Prepared For: WHITE DEVELOPMENT

Designer	Drafter	Checked
SMD	SN	SMD

PES Personalized Engineering Solutions
Personalized Engineering Solutions, LLC
9249 S. Broadway #200-388
Highlands Ranch, CO 80129 720.388.8126
www.pengsolutions.com
Construction Management Civil Engineering Land Planning

CITY HOTEL, CASTLE ROCK
CONSTRUCTION DOCUMENTS
CIVIL SITE DETAILS

Sheet DET4 12 of 29
Date MARCH 2025

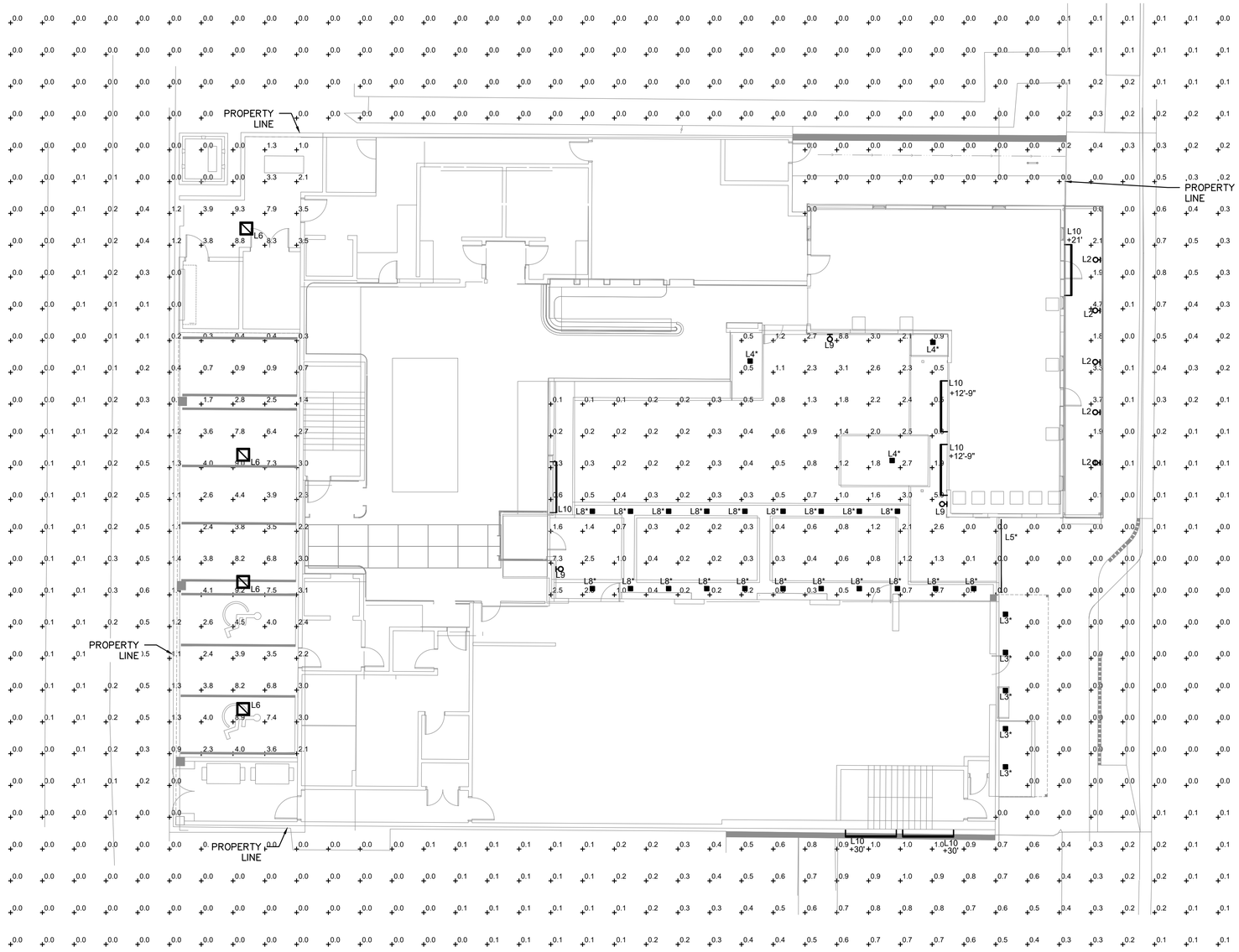

1 SITE PHOTOMETRIC PLAN

SCALE: 1" = 10'-0"

GENERAL NOTES

(THIS SHEET)

A. NO SUBSTITUTIONS, ADDITIONS, OR CHANGES MAY BE MADE WITHOUT PRIOR APPROVAL BY THE CITY OF CASTLE ROCK.

B. ALL CALCULATIONS ARE DONE WITH LIGHT LOSS FACTOR OF 1.0

C. ALL CALCULATION POINTS ARE AT GRADE.

D. ANY PROPOSED LIGHT FIXTURES INSTALLED ON PRIVATE PROPERTY, ADJACENT TO THE RIGHT OF WAY, SHALL BE ORIENTED IN SUCH A MANNER OR LIMITED IN LUMEN OUTPUT TO PREVENT GLARE PROBLEMS AND SHALL NOT EXCEED NATIONAL IES LIGHTING STANDARDS FOR DISABILITY GLARE.

E. LUMINAIRES SHALL BE SHIELDED AND DIRECTED TO AVOID GLARE AND OVERSPILL ONTO ADJACENT PROPERTY.

F. UPLIGHTING, INDICATED WITH ASTERISK(*), IS NOT INCLUDED IN PHOTOMETRIC CALCULATIONS AT GRADE.

G. SEE ARCHITECTURAL DRAWINGS FOR EXACT LOCATIONS.

SITE LIGHTING STATISTICS

ZONE NAME	AVG (FC)	MAX (FC)	MIN (FC)	MAX./MIN.	AVERAGE/MIN.
OVERALL SITE	0.7	9.5	0	N/A	N/A
COURTYARD	0.9	5.0	0.1	50:1	9:1
FRONT ENTRY	1.5	4.5	0.2	22:1	7.5:1

NORTH

0 5 10 20

1 inch10= ft. Horizontal

PROFESSIONAL ENGINEER CERTIFICATION

I HEREBY AFFIRM THAT THESE FINAL CONSTRUCTION PLANS WERE PREPARED UNDER MY DIRECT SUPERVISION, IN ACCORDANCE WITH ALL APPLICABLE TOWN OF CASTLE ROCK AND STATE OF COLORADO STANDARDS AND STATUTES, RESPECTIVELY; AND THAT I AM FULLY RESPONSIBLE FOR ALL DESIGN AND REVISIONS RELATIVE TO SAID PLANS.

THERESA W. GRAY, P.E.
REGISTERED LICENSED PROFESSIONAL ENGINEER
STATE OF COLORADO No. 41315
FOR AND ON BEHALF OF
RAMIREZ, JOHNSON, AND ASSOCIATES
(720)598-0774

TOWN OF CASTLE ROCK APPROVAL
PLANS ARE HEREBY APPROVED FOR ONE YEAR FROM DATE OF DEVELOPMENT SERVICES APPROVAL

APPROVED BY:

DEVELOPMENT SERVICES

DATE	REVISION DESCRIPTION
MAR 14 2025	INITIAL CIVIL CD SUBMITTAL

city hotel-white.jpg

m1a.jpg

Drawing Name: CD Photometric.DWG
Job Number: CITY HOTEL
Prepared For: WHITE DEVELOPMENT
Designer: MC
Drafter: MC
Checked: TWG

Ramirez, Johnson, & Associates
3301 Lawrence St. Ste 2
Denver, CO 80205
P: 720.598.0774

CITY HOTEL, CASTLE ROCK
CONSTRUCTION DOCUMENTS
PHOTOMETRIC PLAN

Sheet E1

Date MARCH 2025

PATH: G:\SHARED DRIVES\PROJECTS\WHITE DEVELOPMENT GROUP\2024-020 CITY HOTEL\XREF\X-TB-CD PHOTOMETRIC.DWG
PLOTTED BY: S. DOUGLAS PLOT DATE: 1/17/2025 11:39 AM
XREFS: X-template-TB;X-SITE;photometric

TYPE L1

Square downlight · Wide beam

BEGA

Application
Recessed ceiling luminaire with symmetric wide beam light distribution. The patented (US 2016/0327243) BEGA Vortex Optics® rotates a parabolic reflector around the vertical axis to form a complex vortex shape. This vortex balances maximum efficiency with optimal glare control while eliminating shadows and artifacts in a uniquely sharp square distribution.

Materials
Clear safety glass
Marine grade, copper free (≤0.3% copper content) A360.0 aluminum alloy
Silicone applied robotically to casting, plasma treated for increased adhesion
Mechanically captive stainless steel fasteners
Stainless steel screw clamps
Aluminum ceiling mounted driver box
BEGA Vortex Optics®
Pure anodized aluminum reflector surface

NRTL listed to North American Standards, suitable for wet locations
Protection class IP 65

Weight: 1.4 lbs.

Electrical

Operating voltage	120-277VAC
Minimum start temperature	-30°C
LED module wattage	8.4W
System wattage	10.4W
Controllability	0-10V, TRIAC, and ELV dimmable
Color rendering index	Ra > 90
Luminaire lumens	815lm
LED service life (L70)	60000hrs

LED color temperature
☐ 4000K (K4)
☐ 3500K (K35)
☐ 3000K (K3)
☐ 2700K (K27)

BEGA can supply you with suitable LED replacement modules for up to 20 years after the purchase of LED luminaires - see website for details

Finish
All BEGA standard finishes are matte, textured powder coat with minimum 3 mil thickness. BEGA Unidure® finish, a fluoropolymer technology, provides superior fade protection in Black, Bronze, and Silver. BEGA standard White is a super durable polyester powder. Optionally available RAL and custom color finishes provided in either polyester powder or liquid paint.

Available colors
☐ Black (BLK) ☐ Bronze (BRZ)
☐ Silver (SLV) ☐ White (WHT)
☐ RAL: ☐ CUS:

Type:
BEGA Product:
Project:
Modified:

Available options
☐ CUS Custom finish
☐ FSC Fusing
☐ MGU Marine grade undercoat
☐ RAL RAL finish

Square downlight · Wide beam

	LED		A	B	C
B24805	8.4W	40°	4 1/8	2 1/8	4 1/8

BEGA 1000 BEGA Way, Carpinteria, CA 93013 (805)684-0533 info@bega-us.com

Due to the dynamic nature of lighting products and the associated technologies, luminaire data on this sheet is subject to change at the discretion of BEGA North America. For the most current technical data, please refer to bega-us. com
© copyright BEGA 2024 Updated 01/09/24

TYPE L2

Wall luminaire · Directed light

BEGA

Application
Wall luminaires with directed light distribution designed for general illumination of pathways and building entrances from various mounting heights.

Materials
Clear safety glass
Marine grade, copper free (≤0.3% copper content) A360.0 aluminum alloy
Silicone applied robotically to casting, plasma treated for increased adhesion
High temperature silicone gasket
Mechanically captive stainless steel fasteners
Pure anodized aluminum reflector

NRTL listed to North American Standards, suitable for wet locations
Protection class IP 65

Weight: 1.0 lbs.

Electrical

Operating voltage	120-277VAC
Minimum start temperature	-20°C
LED module wattage	3.2W
System wattage	5.0W
Controllability	Non-Dimming
Color rendering index	Ra > 80
Luminaire lumens	145lm
LED service life (L70)	60000hrs

LED color temperature
☐ 4000K (K4)
☐ 3500K (K35)
☐ 3000K (K3)
☐ 2700K (K27)

BEGA can supply you with suitable LED replacement modules for up to 20 years after the purchase of LED luminaires - see website for details

Finish
All BEGA standard finishes are matte, textured powder coat with minimum 3 mil thickness. BEGA Unidure® finish, a fluoropolymer technology, provides superior fade protection in Black, Bronze, and Silver. BEGA standard White is a super durable polyester powder. Optionally available RAL and custom color finishes provided in either polyester powder or liquid paint.

Available colors
☐ Black (BLK) ☐ Bronze (BRZ)
☐ Silver (SLV) ☐ White (WHT)
☐ RAL: ☐ CUS:

Type:
BEGA Product:
Project:
Modified:

Available options
☐ AMB Amber LED
☐ CUS Custom finish
☐ MGU Marine grade undercoat
☐ RAL RAL finish

Wall luminaire · Directed light

		LED	A	B	C
B33539	AMB	3.2W	3	5 1/2	3 1/2

BEGA 1000 BEGA Way, Carpinteria, CA 93013 (805)684-0533 info@bega-us.com

Due to the dynamic nature of lighting products and the associated technologies, luminaire data on this sheet is subject to change at the discretion of BEGA North America. For the most current technical data, please refer to bega-us. com
© copyright BEGA 2023 Updated 04/07/23

TYPE L3

In-grade luminaire · Asymmetric • 24V DC

BEGA

Application
Flush in-grade small-scale asymmetric floodlights. Designed for directional lighting, uplighting of trees, walls, columns, or signage from ground surfaces. Luminaires require a remote 24 V DC class 2 power supply suitable to operate at the intended LED wattage.

Materials
Clear safety glass
Corrosion-resistant 304 grade stainless steel
High temperature silicone gasket
Mechanically captive stainless steel fasteners
Pure anodized aluminum reflector

NRTL listed to North American Standards, suitable for wet locations
Protection class IP 68

Weight: 3.1 lbs.

Electrical

Operating voltage	24VDC (remote power supply req.)
Minimum start temperature	-40°C
LED module wattage	3.0W
System wattage	5.8W
Controllability	Non-Dimming
Color rendering index	Ra > 80
Luminaire lumens	364lm
LED service life (L70)	60000hrs

LED color temperature
☐ 4000K (K4)
☐ 3500K (K35)
☐ 3000K (K3)
☐ 2700K (K27)

BEGA can supply you with suitable LED replacement modules for up to 20 years after the purchase of LED luminaires - see website for details

Finish
#4 brushed stainless steel. Custom colors are not available.

Type:
BEGA Product:
Project:
Modified:

Available accessories
☐ B19580 Remote driver box - Static white
☐ B19591 Remote driver box - Static white

See individual accessory spec sheet for details.

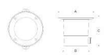

In-grade luminaire · Asymmetric • 24V DC

	LED		A	B	C
B77019	3.0W	38°x35°	4 1/2	3 1/2	3 1/2

BEGA 1000 BEGA Way, Carpinteria, CA 93013 (805)684-0533 info@bega-us.com

Due to the dynamic nature of lighting products and the associated technologies, luminaire data on this sheet is subject to change at the discretion of BEGA North America. For the most current technical data, please refer to bega-us. com
© copyright BEGA 2023 Updated 12/12/23

TYPE L4

Garden in-grade luminaire · Asymmetric • 12V AC

BEGA

Application
In-grade floodlight, ideal for accenting small trees, shrubs, or other landscape features in private gardens. These luminaires are resistant to foot traffic for installation in flower beds, lawns, or gravel. Not to be installed in concrete or near vehicular traffic. Low voltage magnetic transformer is required for operation.

Materials
Clear safety glass
Composite housing
Corrosion-resistant 304 grade stainless steel
Fully potted waterstopper cable
Pure anodized aluminum reflector

NRTL listed to North American Standards, suitable for wet locations
Protection class IP 67

Weight: 1.76 lbs.

Electrical

Operating voltage	12VAC
Minimum start temperature	-40°C
Maximum ambient temperature	40°C
LED module wattage	3.0W
System wattage	3.67W
Controllability	Non-Dimming
Color rendering index	Ra > 90
Luminaire lumens	381lm
LED service life (L70)	60000hrs

LED color temperature
☐ 4000K (K4)
☐ 3500K (K35)
☐ 3000K (K3)
☐ 2700K (K27)

BEGA can supply you with suitable LED replacement modules for up to 20 years after the purchase of LED luminaires - see website for details

Finish
#4 brushed stainless steel. Custom colors are not available.

Type:
BEGA Product:
Project:
Modified:

Available accessories
☐ B536 Low voltage magnetic transformer - 300W

See individual accessory spec sheet for details.

Garden in-grade luminaire · Asymmetric • 12V AC

	LED	A	B	C
B84086	3.0W	4 1/2	2 1/2	4 1/2

BEGA 1000 BEGA Way, Carpinteria, CA 93013 (805)684-0533 info@bega-us.com

Due to the dynamic nature of lighting products and the associated technologies, luminaire data on this sheet is subject to change at the discretion of BEGA North America. For the most current technical data, please refer to bega-us. com
© copyright BEGA 2024 Updated 01/17/24

LUMINAIRE SCHEDULE

TYPE	DESCRIPTION	MANUFACTURER	CATALOG SERIES NUMBER	LAMPS (QTY) TYPE	INPUT VA	DRIVER/ DIM PROTOCOL	LUMENS	VOLTAGE	MOUNTING R	MOUNTING S	MOUNTING P	MOUNTING W	NOTES
L1	SQUARE DOWNLIGHT, WIDE DISTRIBUTION	BEGA	B24805	LED 2700K	8.4	0-10V	815	120					
L2	WALL SCONCE	BEGA	B33539	LED 2700K	3.2	0-10V	145	120		X			
L3	IN-GRADE, ASYMMETRIC THROW	BEGA	B77019	LED 2700K	3	0-10V	364	120					
L4	IN-GRADE, LANDSCAPE, ASYMMETRIC THROW	BEGA	B84086	LED 2700K	3	0-10V	381	120					
L5	WET-LISTED TAPE LIGHT	WAC	T24-OD1-X-27P	LED 2700K	1.2W/FT	0-10V	100/FT	120		X			
L6	2X2 WET-LISTED RECESSED TROFFER	LITHONIA	2WRTL-F-L24-3000LM-OAW -AFL-120-GZ1-30K-80CRI	LED 3000K	26.6	0-10V	2848	120				X	
L7	GARDEN BOLLARD	BEGA	B77239	LED 2700K	1.9	0-10V	146	120				X	
L8	IN-GRADE, SYMMETRIC FLOODLIGHT	BEGA	B77018	LED 2700K	3	0-10V	352	120		X			
L9	DECORATIVE SCONCE	HUBBARDTON FORGE	303003	LED G9	2	ELV		120					
L10	LINEAR SIGNAGE LUMINAIRE	ALCON	11704-X-4L-27K-12-X-CL-UNI	LED									

ABBREVIATIONS: R - RECESSED, S - SURFACE, P - PENDANT, W - WALL; BF - BOTTOM OF FIXTURE; OH - OVERALL FIXTURE HEIGHT; RD - RECESSED FIXTURE DEPTH; AFF - ABOVE FINISHED FLOOR

GENERAL NOTES:
A. CONTRACTOR TO VERIFY LIGHT FIXTURE CATALOG NUMBER AND INSTALLATION REQUIREMENTS PRIOR TO ORDERING.
B. VERIFY TRIM COMPATIBILITY WITH CEILING TYPE PRIOR TO SUBMITTALS.

PROFESSIONAL ENGINEER CERTIFICATION

I HEREBY AFFIRM THAT THESE FINAL CONSTRUCTION PLANS WERE PREPARED UNDER MY DIRECT SUPERVISION, IN ACCORDANCE WITH ALL APPLICABLE TOWN OF CASTLE ROCK AND STATE OF COLORADO STANDARDS AND STATUTES, RESPECTIVELY; AND THAT I AM FULLY RESPONSIBLE FOR ALL DESIGN AND REVISIONS RELATIVE TO SAID PLANS.

THERESA W. GRAY, P.E.
REGISTERED LICENSED PROFESSIONAL ENGINEER
STATE OF COLORADO No. 41315
FOR AND ON BEHALF OF
RAMIREZ, JOHNSON, AND ASSOCIATES
(720)598-0774

TOWN OF CASTLE ROCK APPROVAL
PLANS ARE HEREBY APPROVED FOR ONE YEAR FROM DATE OF DEVELOPMENT SERVICES APPROVAL

APPROVED BY:

DEVELOPMENT SERVICES

NORTH

0 5 10 20
1 inch10= ft. Horizontal

DATE	REVISION DESCRIPTION
MAR 14 2025	INITIAL CIVIL CD SUBMITTAL

city hotel-white.jpg

m1a.jpg

Drawing Name: CD Photometric.DWG			
Job Number: CITY HOTEL			
Prepared For: WHITE DEVELOPMENT	Designer: MC	Drafter: MC	Checked: TWG

Ramirez, Johnson, & Associates
3301 Lawrence St. Ste 2
Denver, CO 80205
P: 720.598.0774

CITY HOTEL, CASTLE ROCK
CONSTRUCTION DOCUMENTS
LIGHTING CUT SHEETS

Sheet **E2**

Date MARCH 2025

PATH: G:\SHARED DRIVES\PROJECTS\WHITE DEVELOPMENT GROUP\2024-020 CITY HOTEL\XREFX-TB-CD PHOTOMETRIC.DWG
PLOTTED BY: S. DOUGLAS PLOT DATE: 1/17/2025 11:39 AM
XREFS: X-template-TB;X-SITE;photometric

TYPE L5

InvisiLED® OUTDOOR Pro+

Wet Rated LED Tape

WAC

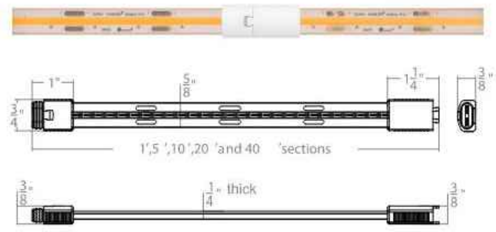

Fixture Type:

Catalog Number:

Project:

Location:

PRODUCT DESCRIPTION

The IP66 rated COB Static White strip light, with selectable color temperatures of 2700K, 3000K, 3500K, and 4000K, is engineered for exceptional outdoor lighting. Its robust double insulated silicone encasement ensures both moisture protection and installation flexibility. This versatile strip light can be effortlessly controlled either through a standard wall box dimmer (TRIAC/ELV) via power supply for traditional operation or integrated into smart home systems via the WAC outdoor controller for app-based management. It features a modular push-in connector that not only provides a neat and hidden installation within landscape designs but also offers the convenience of adjustable length through a simple plug-and-play system, accommodating any outdoor space with ease and maintaining an aesthetically pleasing look. With a durable lifespan of 50,000 hours, this lighting strip adapts to user preferences and installation needs with seamless sophistication.

FEATURES

- **Weatherproof Resilience:** Boasting a robust wet rating, engineered to maintain vibrancy in rain, snow, or sleet.
- **LED Tape with IP66 Rated Silicone Jacket:** Offers added protection for enhanced durability against challenging outdoor conditions.
- **Radiant White LED Emission:** Specialized white LED chips provide a high-intensity, stable white light output with a Color Rendering Index (CRI) exceeding 90, for precise and authentic color representation in outdoor environments.
- **Dual Control Options:** Manage your LED tape with versatile ease – opt for a TRIAC/ELV dimmer connected through a power supply for refined traditional adjustment, or utilize our Outdoor wireless DMX controller for advanced functionality, granting you the power of DMX control along with mobile app and WallStation connectivity for an integrated, modern lighting solution.
- **Effortless Connectivity:** Our intuitive push-in connectors ensure seamless extending and powering of your LED tape, for hassle-free installation.
- **Smart Compatibility:** Effortlessly sync with the MyWAC app, WallStation, or integrate into your smart home system, including Google Home and Amazon Alexa, using the WAC outdoor controller.
- **Dual Luminosity & Custom Lengths:** Select from 100 or 200 lumens per foot LED tapes available in spools from 1ft to 20ft for both luminosities, with exclusive lengths of 30ft for 200 lm/ft and 40ft for 100 lm/ft, for versatile and precise lighting solutions.
- **Customizable Length:** Tailor the LED tape to your desired size with the ability to cut it every 2 inches and seal the ends with our convenient End Cap accessories

TAPE SELECTIONS

System	Power		Length (in feet)					Color Temp		Finish
								27P	2700K	
T24-OD1	100+lm/ft	1.2W/ft	01	05	10	20	40	30P	3000K	White
T24-OD2	200+lm/ft	2.3W/ft	01	05	10	20	30	35P	3500K	
								40P	4000K	

Example: **T24-OD1-20-30P**

SPECIFICATIONS

Construction: Flexible strip light in silicon tube
Cutting Interval: 2"
Input: 24VDC
Max Power ~ 1.2 W/ft @100 lm/ft
~ 2.3 W/ft @200 lm/ft
Lumens: 100 & 200 lm/ft
Max Run: Refer to table below
Controls: Wireless: Through T24-OD-CTR Outdoor Wireless DMX Controller
Wired: Through Std. Power Supply
Dimming: Through wall controller: LED-WCT-WT, and MyWAC app, DMX 512-A, Smart Home assistant (Google Home, Amazon Alexa)
CRI: 90+ (White Light)
McAdams Steps: 3
Color Temp: 2700K/3000K/3500K/4000K
Rated Life: 50,000 hours
Operating Temp: -4°F to 104°F (-20°C to 40°C)
Standards: UL & cUL listed, Wet Location listed, Title 24 Compliant
IP Rating: IP66

Total Length of Lead Wire from Power Supply/ Controller to Tape	Max Run Length			
	100 lm/ft		200 lm/ft	
	TRIAC/ELV Dimming: Power Supply	Wireless Control: Power Supply + Wireless DMX Controller	TRIAC/ELV Dimming: Power Supply	Wireless Control: Power Supply + Wireless DMX Controller
3 FT	40ft	40ft	30ft	30ft
9 FT	40ft	40ft	30ft	26ft
12 FT	40ft	38ft	26ft	22ft
18 FT	33ft	29ft	20ft	17ft
24 FT	26ft	24ft	16ft	14ft
30 FT	22ft	20ft	13ft	12ft
40 FT	17ft	16ft	10ft	9ft

Note: Calculation based on 6 ft. lead wire between Power Supply and controller

waclighting.com
Phone (800) 526.2588
Fax (800) 526.2585

Headquarters, East Manufacturing Facility
44 Harbor Park Drive
Port Washington, NY 11050

South East Manufacturing Facility
1600 Distribution Ct
Lithia Springs, GA 30122

Central Manufacturing Facility
1700 South J Elmer Freeway, Ste 100
Cedar Hill, TX 75104

West Manufacturing Facility
1750 S Archibald Ave
Ontario, CA 91761

WAC Lighting retains the right to modify the design of our products at any time as part of the company's continuous improvement program. DEC 2023 1

TYPE L6

LITHONIA LIGHTING®

Catalog Number	
Notes	
Type	

LED Recessed Wet Location Troffer

WRTL

FEATURES & SPECIFICATIONS

INTENDED USE — Wet location, recessed LED troffer for general illumination of demanding environments subject to dust and moisture. Typical applications include shower areas, bathrooms, recreational facilities and canopies.

Certain airborne contaminants may adversely affect the functioning of LEDs and other electronic components, depending on various factors such as concentrations of the contaminants, ventilation, and temperature at the end-user location. Click here for a list of substances that may not be suitable for interaction with LEDs and other electronic components.

CONSTRUCTION — Housing is made from 20-gauge cold rolled steel. Door frame is .060 painted aluminum and lens is diffused acrylic. Gasket is closed cell neoprene.

Finish: All CRS (cold rolled steel) and aluminum parts are finished with electrostatically deposited, thermally set, polyester powder paint after fabrication. Door frame finish available in black, white and silver colors. Enclosure finish available in white, Antimicrobial white and super-durable white.

OPTICS — Long-life LEDs, coupled with high-efficiency drivers, provide extended service life. Lumen maintenance of L80/60,000 hours, L70>100,000 hours.

ELECTRICAL — Thermally protected, resetting, Class P, HPF, non-PCB, UL listed, CSA certified driver is standard.

LED driver delivers dimming from a 0-10V control signal. Dims to 1% standard.

Luminaire Surge Protection Level: Designed to withstand up to 6kV/3kA per ANSI C82.77-5-2015.

INSTALLATION — Lay-in grid or in-ceiling sheet rock installation using swing-arms with range from 1" to 2" grid height. See drawings for other critical dimensions. Swing-arms are not intended to secure fixture without additional support. Line voltage supply wiring entrance opening is 7/8".

LISTINGS — CSA certified to meet U.S. and Canadian standards (UL1598 and UL8750) or NOM Certified. IC rated. Wet location listed. FPA option: NSF Splash Zone 2 (overlap door only).

BUY AMERICAN ACT — Product with the BAA option is assembled in the USA and meets the Buy America(n) government procurement requirements under FAR, DFARS and DOT regulations. Please refer to www.acuitybrands.com/buy-american for additional information.

For use in ambient temperatures ranging from -4°F (-20°C) to 104°F (40°C) with the exception of 10000LM(1X4) 12000LM(2X2) and 24000LM(2X4). These lumen packages are for use in ambient temperatures ranging from -4°F (-20°C) to 77°F (25°C).

DesignLights Consortium® (DLC) qualified product. Not all versions of this product may be DLC qualified. Please check the DLC Qualified Products List at www.designlights.org/QPL to confirm which versions are qualified.

WARRANTY — 5-year limited warranty. This is the only warranty provided and no other statements in this specification sheet create any warranty of any kind. All other express and implied warranties are disclaimed. Complete warranty terms located at: www.acuitybrands.com/support/warranty/terms-and-conditions

Note: Actual performance may differ as a result of end-user environment and application.

All values are design or typical values, measured under laboratory conditions at 25 °C.

Specifications subject to change without notice.

A+ Capable Luminaire

This item is an A+ capable luminaire, which has been designed and tested to provide consistent color appearance and out-of-the-box control compatibility with simple commissioning.

- All configurations of this luminaire meet the Acuity Brands' specification for chromatic consistency
- This luminaire is part of an A+ Certified solution for nLight® control networks marked by a shaded background*

To learn more about A+, visit www.acuitybrands.com/aplus.

*See ordering tree for details

INDUSTRIAL

WRTL
Page 1 of 6

TYPE L7

BEGA

Garden bollard · Direct burial anchorage • 12V AC

Type:
BEGA Product:
Project:
Modified:

Application
Pathway luminaire with directed light for use in the private sector. These luminaires are ideally suited for gardens, entryways, and for many applications on paths and terraces. Anchorage unit is intended for direct burial in concrete or soil. Low voltage magnetic transformer required for operation.

Materials
Clear safety glass with optical texture
Marine grade, copper free (≤0.3% copper content) A360.0 aluminum alloy
Mechanically captive stainless steel fasteners
High temperature silicone gasket
Galvanized steel anchorage
Pure anodized aluminum reflector

NRTL listed to North American Standards, suitable for wet locations
Protection class IP 65

Weight: 6.0 lbs.

Electrical

Operating voltage	12VAC
Minimum start temperature	-40°C
LED module wattage	1.9W
System wattage	4.0W
Controllability	Non-Dimming
Color rendering index	Ra > 80
Luminaire lumens	146lm
LED service life (L70)	60000hrs

LED color temperature
○ 4000K (K4)
○ 3500K (K35)
○ 3000K (K3)
○ 2700K (K27)

BEGA can supply you with suitable LED replacement modules for up to 20 years after the purchase of LED luminaires - see website for details

Finish
All BEGA standard finishes are matte, textured powder coat with minimum 3 mil thickness. BEGA Unidure® finish, a fluoropolymer technology, provides superior fade protection in Black, Bronze, and Silver. BEGA standard White is a super durable polyester powder. Optionally available RAL and custom color finishes provided in either polyester powder or liquid paint.

Available colors
○ Black (BLK) ○ Bronze (BRZ)
○ Silver (SLV) ○ White (WHT)
○ RAL: ○ CUS:

Available options
AMB 77239 Amber LED
CUS Custom finish
MGU Marine grade undercoat
RAL RAL finish

Available accessories
B536 Low voltage magnetic transformer · 300W

See individual accessory spec sheet for details.

Garden bollard · Direct burial anchorage • 12V AC

	LED	A	B	C
B77239	1.9W	3	27 1/2	5

BEGA 1000 BEGA Way, Carpinteria, CA 93013 (805) 684-0533 info@bega-us.com

Due to the dynamic nature of lighting products and the associated technologies, luminaire data on this sheet is subject to change at the discretion of BEGA North America. For the most current technical data, please refer to bega-us.com
© copyright BEGA 2024
Updated 05/04/23

TYPE L8

BEGA

In-grade luminaire · Symmetric • 24V DC

Type:
BEGA Product:
Project:
Modified:

Application
Flush in-grade small-scale symmetric floodlights. Designed to uplight trees, walls, columns, or signage from ground surfaces. Luminaires require a remote 24 V DC class 2 power supply suitable to operate at the intended LED wattage.

Materials
Clear safety glass
Corrosion-resistant 304 grade stainless steel
High temperature silicone gasket
Mechanically captive stainless steel fasteners
Pure anodized aluminum reflector

NRTL listed to North American Standards, suitable for wet locations
Protection class IP 68

Weight: 3.1 lbs.

Electrical

Operating voltage	24V DC (remote power supply req.)
Minimum start temperature	-40°C
LED module wattage	3.0W
System wattage	5.8W
Controllability	Non-Dimming
Color rendering index	Ra > 80
Luminaire lumens	352lm
LED service life (L70)	60000hrs

LED color temperature
○ 4000K (K4)
○ 3500K (K35)
○ 3000K (K3)
○ 2700K (K27)

BEGA can supply you with suitable LED replacement modules for up to 20 years after the purchase of LED luminaires - see website for details

Finish
#4 brushed stainless steel. Custom colors are not available.

Available accessories
B19580 Remote driver box · Static white
B19591 Remote driver box · Static white

See individual accessory spec sheet for details.

In-grade luminaire · Symmetric • 24V DC

	LED	⊔	A	B	C
B77018	3.0W	23°	4 5/8	3 1/8	3 7/8

BEGA 1000 BEGA Way, Carpinteria, CA 93013 (805) 684-0533 info@bega-us.com

Due to the dynamic nature of lighting products and the associated technologies, luminaire data on this sheet is subject to change at the discretion of BEGA North America. For the most current technical data, please refer to bega-us.com
© copyright BEGA 2024
Updated 05/01/23

TYPE L9

HUBBARDTON FORGE

Mason Outdoor Sconce

Base Item #: 303003

Selected Options

Lamping	Finish
Incandescent (SKT)	Coastal Bronze (75)

Option1
Clear Glass (ZM) [ZM0448]

Configured item #: 303003-1007

Smart String: 303003-SKT-75-ZM0448

Image shown may not correspond to selected options

Specifications

Dimensions	
Height	11.5"
Width	8.2"
Depth	9"
Product Weight	6.2 lbs
Backplate	5.5" x 4.9"
Mounting Height - Vertical	5.9"

Lamping Information	
Socket Type	G9
Bulb	G9, 60 watt Max
Number of Bulbs	1 (not included)
Location Rating UL	Outdoor Wet
Safety Rating	UL|CUL listed

Options

Lamping	Finish	Option1
Incandescent (SKT)	Coastal Bronze (75)	Clear Glass (ZM) [ZM0448]
	White (02)	
	Natural Iron (20)	
	Coastal Black (80)	
	Oil Rubbed Bronze (14)	
	Coastal Burnished Steel (78)	
	Coastal Dark Smoke (77)	

Hubbardtonforge.com customerservice@vtforge.com 888-826-4766

TYPE L10

ALCON LIGHTING

Project Name: Type: Quantity:

Alcon 11704 Adjustable Outdoor Wall Art and Sign Light

FIXTURE SPECIFICATIONS

INTENDED USE

Our outdoor architectural specification-grade linear wall-mounted light showcases signs or works of art. The fixture comes with an option to extend the length for lighting wider wall areas. Constant and evenly distributed illumination from beginning to the end of runs adds value to commercial or residential settings. Made in America.

FEATURES

Construction: Extruded aluminum
CRI: 90+
Driver: Remote IP68-rated universal driver capable of 0-10V, MLV, ELV, TRIAC dimming to 1%.
Voltage: LED 24VDC & driver 120-277V
Average Life: 50,000 hours
Warranty: 5 years carefree for parts & components (Labor not included)
Listings: cULus, Made in the USA

Profile Dimensions

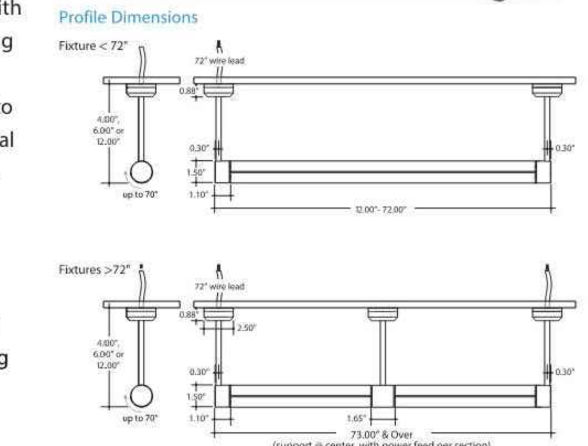

SPEC GRADE · cUL LISTED · IP68 · WET LOCATION RATED · ROHS COMPLIANT · LIMITED 5-YEAR WARRANTY · MADE IN USA

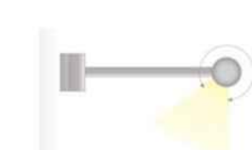

Fixture Head Rotates 70°

ORDERING INFORMATION Example: (11704-24-4L-27K-6-SA-FR-ND)

Model	Length	Lumen per foot	Color Temp	Arm Length	Finish[2]	Lens	Remote Driver
11704	24 2'	4L 421 lumen	27K 2700K	4 4"	SA Silver	FR Frosted Standard	UNI 120-277V Universal (0-10V/MLV/TRIAC 1% Dimming)
	36 3'	5L 565 lumen	30K 3000K	6 6"	WH White	CL Clear	
	48 4'		35K 3500K	12 12"	BK Black		
	72[1] 6'		40K 4000K		BZ Bronze		
	96[1] 8'				AB Aged Brass		
	XX[1] Custom				PG Polished Gold		
					CH Chrome		
					NI Nickel		
					MBK Matte Black		

1 Fixtures over 72" consist of 2 fixtures, each requiring its own driver.
2 Extended lead times will apply on all finishes other than silver
3 Polished Gold finishes have a maximum fixture length of 48", and Chrome finishes have a maximum fixture length of 72".

AlconLighting.com © 2021 ■ (877) 733-5236 ■ products@alconlighting.com

Rev. 1/4/24 1/3

NORTH

0 5 10 20
1 inch = 10 ft. Horizontal

PROFESSIONAL ENGINEER CERTIFICATION

I HEREBY AFFIRM THAT THESE FINAL CONSTRUCTION PLANS WERE PREPARED UNDER MY DIRECT SUPERVISION, IN ACCORDANCE WITH ALL APPLICABLE TOWN OF CASTLE ROCK AND STATE OF COLORADO STANDARDS AND STATUTES, RESPECTIVELY; AND THAT I AM FULLY RESPONSIBLE FOR ALL DESIGN AND REVISIONS RELATIVE TO SAID PLANS.

THERESA W. GRAY, P.E.
REGISTERED LICENSED PROFESSIONAL ENGINEER
STATE OF COLORADO No. 41315
FOR AND ON BEHALF OF
RAMIREZ, JOHNSON, AND ASSOCIATES
(720)598-0774

TOWN OF CASTLE ROCK APPROVAL
PLANS ARE HEREBY APPROVED FOR ONE YEAR FROM DATE OF DEVELOPMENT SERVICES APPROVAL

APPROVED BY:

DEVELOPMENT SERVICES

PATH: G:\SHARED DRIVES\PROJECTS\WHITE DEVELOPMENT GROUP\2024-020 CITY HOTEL\XREF\X-TB-CD PHOTOMETRIC.DWG
PLOTTED BY: S. DOUGLAS PLOT DATE: 1/17/2025 11:39 AM
XREFS: X-template-TB;X-SITE;photometric

DATE	REVISION DESCRIPTION
MAR 14 2025	INITIAL CIVIL CD SUBMITTAL

city hotel-white.jpg

m1a.jpg

Drawing Name: CD Photometric.DWG			
Job Number: CITY HOTEL			
Prepared For: WHITE DEVELOPMENT	Designer: MC	Drafter: MC	Checked: TWG

Ramirez, Johnson, & Associates
3301 Lawrence St. Ste 2
Denver, CO 80205
P: 720.598.0774

CITY HOTEL, CASTLE ROCK
CONSTRUCTION DOCUMENTS
LIGHTING CUT SHEETS

Sheet E3
15 of 29
Date MARCH 2025

QUALITY ASSURANCE

A. Contractor Qualifications:
   1. Contractor shall submit a list of five (5) previously constructed projects of similar size and magnitude prior to the bid date to be qualified. Contact names, telephone numbers, and date of completion shall be listed for each project.
   2. The Contractor's site foreman shall hold a PICP Specialist Designation from the Interlocking Concrete Pavement Institute (ICPI). The site foreman shall be onsite for the entire installation.
   3. Contractor shall conform to all local, state/provincial licensing and bonding requirements.

B. Mockups: Build mockups to verify selections made under submittals, to demonstrate aesthetic effects, and to set quality standards for materials and execution.
   1. Install a 10 ft x 10 ft paver area following the installation practices described in Article 3.2 to 3.4. This area shall be used to verify joint sizes; lines; laying pattern(s); stitching details (for mechanical installation); color(s); and, texture of the job.
   2. To provide a proper representation of color blend, blending during installation of sample mock-up will be pulled from a minimum of 3 cubes.
   3. This area shall be the standard from which the work will be judged.
   4. Subject to approval by the Owner, the mock-up may be retained as part of the finished work. If mock-up is not retained, remove and dispose of mock-up at the completion of the project.

PRODUCTS

A. Permeable Interlocking Concrete Pavers Basis-of-Design:
   1. Paver Name: Aqualine™ 4.5" x 9"
      a. Thickness: 3-1/8 inches (80 mm)
      b. Color: TBD
      c. Finish: Standard (Smooth)
      d. Supplier:
         Oldcastle APG - Amcor
      e. Contact Person: David Martin 720.591.9236
      f. Substitutions: No substitutions permitted.

PAVER DESIGN CONCEPT

BELGARD®

This paver design concept has been prepared by Belgard Commercial for informational purposes only. Belgard Commercial provides design assistance, but in no way assumes the role of the engineer of record. The final site design and calculations are the responsiblity of the engineer of record.

B. Pavers shall meet the minimum material and physical properties set forth in ASTM C 936, Standard Specification for Interlocking Concrete Paving Units.
   1. Measured length or width of test specimens shall not differ by more than +/- 0.063 in, while measured thickness shall not differ by more than +/- 0.125 in.
   2. Average compressive strength of 8,000 psi (55 MPa) with no individual unit under 7,200 psi (50 MPa) when tested in accordance with ASTM C140.
   3. Average absorption of 5% or less with no unit greater than 7% when tested in accordance with ASTM C140.
   4. Freeze-thaw durable as tested in accordance with ASTM C1645. The average mass loss of all specimens tested shall not be greater than (A) 225 g/m2 when subject to 28 freeze-thaw cycles, or (b) 500 g/m2 when subject to 49 freeze-thaw cycles. Testing shall be conducted using a 3% saline solution.
   5. Efflorescence shall not be a cause for rejection.
   6. Pigment in Concrete Pavers shall conform to ASTM C979.

PREPARATION

A. Prior to commencement of any work, the Contractor shall conduct a pre-construction meeting with the Owner, Designer, and affected sub-trades. The pre-construction meeting should establish contractor responsibilities and at a minimum verify:
   1. The location of the mock-up, and whether it will be part of the final construction or need to be removed.
   2. The site layout is in general conformance to the construction documents. In particular, the location and elevation of discharge points (if any) of the pipe underdrains.
   3. The subgrade lines and elevations are in general conformance with the construction documents. The subgrade elevations shall be within +/- 0.1 ft of the specified grades.
   4. The minimum slope of subgrade shall be at least 0.5% or as specified in the design.
   5. Subgrade soil conditions and grades meet the requirements in the construction documents.
   6. The details of the site's erosion and sediment control plan.

B. Proof-roll prepared subgrade according to requirements in Section 31 20 00 Earth Moving to identify soft pockets and areas of excess yielding. Proceed with subbase installation only after deficient subgrades have been corrected. Scarify subgrade surface following any stabilization efforts before installing subbase course.

C. If compaction is required in the construction documents, Contractor shall verify compaction of the subgrade is in general conformance with the construction documents prior to placing subbase materials.

D. Once the Contractor has confirmed the subgrade conditions are in general conformance with the requirements in the construction documents, the Contractor shall begin installing the subbase material. By initiating installation of the subbase material, the Contractor acknowledges acceptance of the subgrade.

AGGREGATE MATERIALS

A. General Requirements:
   1. Clean, non-plastic aggregate, free from deleterious or foreign matter, manufactured from crushed rock. Recycled aggregates shall not be used.
   2. Percent of angular and sub-angular particles greater than 90%. Rounded river gravel shall not be used.
   3. LA Abrasion of the aggregate used shall be less than 40 as per ASTM C131.
   4. All aggregates shall be washed and have less than 2% passing the No. 200 (0.075 mm) sieve.
   5. All aggregate material gradations shall be tested in accordance with ASTM C136.

B. Bedding course/joint fill material - open-graded aggregate conforming to ASTM C33 No. 8, 89, or 9.

C. Base course material - open-graded aggregate conforming to ASTM C33 No. 57.

D. Subbase material - open-graded aggregate conforming to ASTM C33 No. 2, 3, or 34.

INSTALLATION OF SUBBASE AND BASE COURSES

A. Keep the area where the pavement is to be constructed free from sediment during the entire job. Any materials contaminated with sediment shall be removed and replaced with clean material.

B. Install the subbase course and base course at the thicknesses, compaction rates, surface tolerances, and elevations outlined below.
   1. Place and spread the first layer of subbase without displacing or damaging the geosynthetics (if used). To prevent damage, tracked vehicles shall not be allowed directly on the geotextiles or geomembranes during the initial spreading process of the subbase layer.
   2. The aggregate should be spread and compacted in uniform layers not exceeding 6-inch loose thickness. Compaction is performed using either a 10 T (10 ton) vibratory roller or a minimum 13,500 lb-f centrifugal force reversible vibratory plate compactor. For each lift, make at least two passes in the vibratory mode and at least two passes in the static mode and continue compaction until there is no visible movement in the materials.
   3. At the specified elevation(s), install the pipe underdrains in accordance with the manufacturer's recommendations. Ensure the pipes are sloped to provide proper drainage to the outlets. Pipes shall be surrounded by a minimum of 4 inches of base course material to prevent damage during compaction. Care must be taken not to damage pipe underdrains during subsequent aggregate installation.
   4. Final subbase surface tolerance shall be plus or minus 0.1 ft over a 10-foot straight edge laid in any direction.
   5. Final base surface tolerance shall be plus or minus 3/4 inch over a 10-foot straight edge laid in any direction.
   6. Provide proper compaction near curbs, grade beams, concrete collars around utility structures, lights standards, tree wells, building edges and other protrusions as applicable to the project.

Prepared By: Paul C. Cureton, P.E.
email: paul.cureton@oldcastle.com
phone: 224.762.1942

BELGARD® PAVES THE WAY

Client: PES

Project Name: Castle Rock City Hotel Courtyard
Castle Rock, Colorado

Sheet Name: GENERAL NOTES

Sheet No: C0.1
03.07.2024

INSTALLATION OF BEDDING COURSE, PAVERS, & JOINT MATERIAL

A. Spread the bedding course evenly over the base course and screed to a nominal 2 in. thickness utilizing an approved mechanical spreader or by screed rails and boards. Do not use the bedding material to fill depressions in the base course surface. Surface tolerances shall be +/- 3/8 inch over a 10-foot straight edge.

B. Ensure that concrete pavers are free of foreign material before installation. Concrete pavers shall be inspected for color distribution and all chipped, damaged, or discolored concrete pavers shall be replaced. Initiation of concrete paver placement shall be deemed to represent acceptance of the pavers.

C. Lay the concrete pavers in the pattern(s) shown on the drawings. Maintain straight pattern lines. For mechanical installations, follow the stitching details as submitted and verified during the mock-up.

D. Paving units shall be installed simultaneously from a minimum of 3 bundles for hand installations, and 6 bundles for mechanical installations to provide proper color blending.

E. Joints between the individual concrete pavers shall be uniformly maintained and installed in accordance with the in-place dimensions

F. Fill gaps at the edges of the paved area with cut pavers or edge units. Do not install cut pavers smaller than one-third of a whole paver along edges subject to vehicular traffic - trim two pavers to fit.

G. Cut pavers using a masonry saw or splitting device. Upon completion of cutting, the area must be swept clean of all debris.

H. Using a low amplitude plate compactor capable of at least 5,000 lbs. (22 kN) compaction at a frequency of 75 Hz -100 Hz, compact and seat the concrete pavers into the bedding course.

I. The pavers shall be compacted to achieve consolidation of the bedding course and brought to level and profile by not less than three passes. Initial compaction should proceed as closely as possible following the installation of the paving units and prior to the acceptance of any traffic.

J. Any units that are structurally damaged during compaction shall be immediately removed and replaced.

K. Apply the joint material to the surface and sweep into the joints and voids. Fill joints and voids then sweep off excess material before vibrating the material down into the joints using a plate compactor. This will typically require two to three passes with the plate compactor.

L. Do not compact within 6 feet of unrestrained edges of the paving units.

M. All work to within 6 feet (1 m) of the laying face must be left fully compacted at the end of each day.

N. Sweep off excess aggregate when the job is complete.

AS-BUILT CONSTRUCTION TOLERANCES

A. Final inspection shall be conducted to verify conformance to the drawings after removal of excess aggregate. All pavements shall be finished to lines and levels to ensure positive drainage at all drainage outlets and channels.

B. The final surface elevations shall not deviate more than +/- 3/8 inch under a 10 ft long straight edge.

C. Lippage shall be no greater than 1/8-inch difference in height between adjacent pavers.

D. Surface elevation of pavers shall be 1/8-inch to 1/4-inch above adjacent rigid surfaces, including drainage inlets, concrete collars or gutters, sidewalks, etc.

E. Bond lines for the pavers shall be +/- 1/2-inch over a 50-foot string ling.

F. Verify the in-situ surface infiltration rate of the permeable pavement is a minimum of 100 in/hour using ASTM C1781.

MAINTENANCE & PROTECTION

A. At the completion of the work, the Contractor shall provide the Owner with the manufacturer's PICP System Operation and Maintenance Guidelines.

B. Once the work is complete, the Owner shall be responsible for protecting the work from sediment deposition and damage due to subsequent construction activity on the site.

C. The Contractor shall return to the site after 6 months from the completion of the work and conduct an inspection of the PICP System with the Owner, Designer, and Contractor in accordance with the PICP System Operation and Maintenance Guidelines, and refill joint material, if required.

PAVER DESIGN CONCEPT

BELGARD

This paver design concept has been prepared by Belgard Commercial for informational purposes only. Belgard Commercial provides design assistance, but in no way assumes the role of the engineer of record. The final site design and calculations are the responsiblity of the engineer of record.

Prepared By: Paul C. Cureton, P.E.
email: paul.cureton@oldcastle.com
phone: 224.762.1942

BELGARD PAVES THE WAY

Client: PES

Project Name: Castle Rock City Hotel Courtyard
Castle Rock, Colorado

Sheet Name: GENERAL NOTES

Sheet No: C0.2
03.07.2024

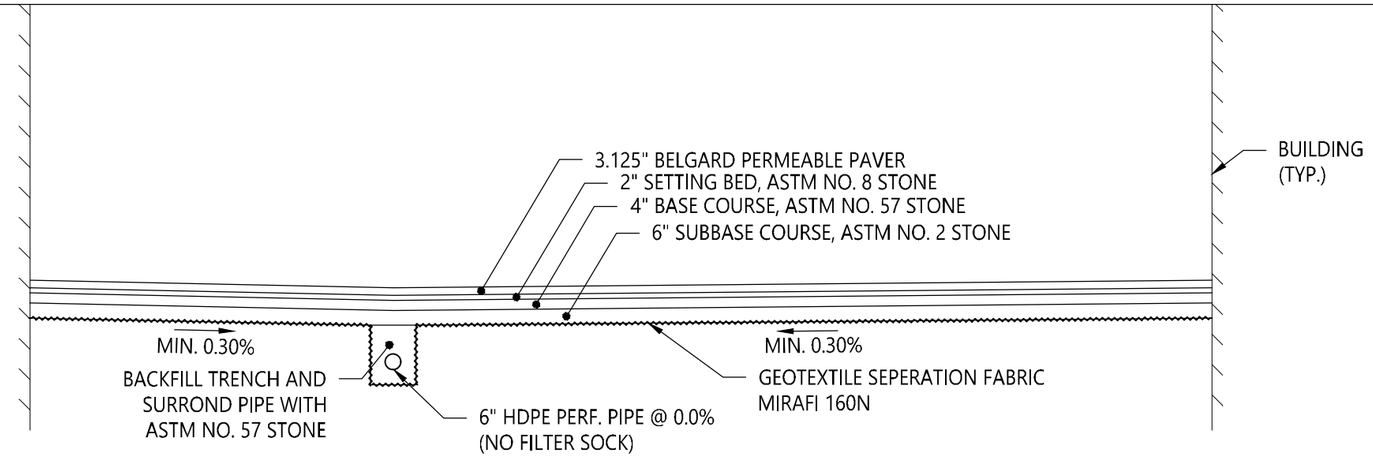

PICP 1

PICP COURTYARD SECTION

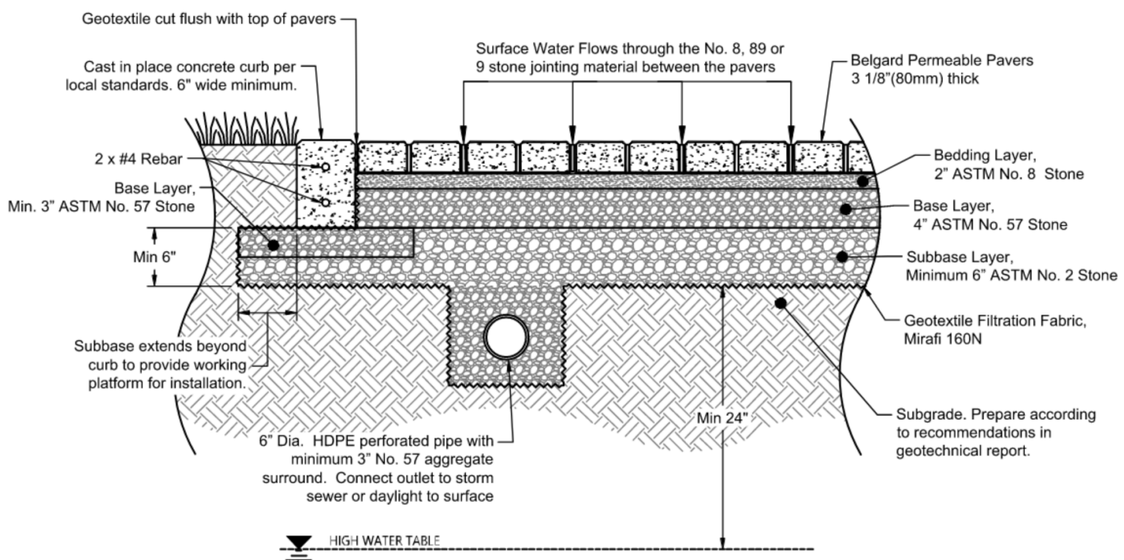

PICP PAVEMENT SECTION W/ UNDERDRAIN

PAVER DESIGN CONCEPT

BELGARD

This paver design concept has been prepared by Belgard Commercial for informational purposes only. Belgard Commercial provides design assistance, but in no way assumes the role of the engineer of record. The final site design and calculations are the responsiblity of the engineer of record.

Prepared By: Paul C. Cureton, P.E.
email: paul.cureton@oldcastle.com
phone: 224.762.1942

BELGARD PAVES THE WAY

Client: PES

Project Name: *Castle Rock City Hotel Courtyard*
Castle Rock, Colorado

Sheet Name: *PICP SECTION*

Sheet No: *C1.1*
03.07.2024

CONSTRUCTION PROTECTION FOR PICP

Protecting PICP from excessive sediment buildup during construction is important to long-term performance and effective future maintenance efforts. Most sites build PICP systems first to protect the open-graded aggregates from debris, dirt, etc., and then the PICP is used for site access during construction. During the pre-construction meeting, various trades should review material flow that will impact the PICP system by contamination or staining. Concrete trucks, masonry equipment, and delivery vehicles may utilize the PICP, but consideration on how washout and debris from these trades will impact the paver surface must be addressed. Excessive mud tracked on the pavers may cause clogging in some areas, but can be removed with a vacuum street sweeper at the conclusion of construction activities and prior to turning the project over to the owner. In addition, the PICP system can serve as an integral part of the project's Stormwater Pollution Prevention Plan if designated before construction with a plan to maintain and restore the PICP to full surface infiltration capacity. Oldcastle recommends that the PICP be used by construction traffic if the joint material is removed and replaced upon substantial completion of the project. Surface infiltration testing should be performed with infiltration results of at least 100-inches/hour or as agreed upon by the owner.

An alternative solution to protect the PICP system would be to make an initial cut to within 12-inches of final sub-grade and cover with a sacrificial layer of ASTM No. 2 aggregate subbase to use as a construction traffic and sediment trap. When final PICP construction can proceed, the sacrificial 12-inches of soil and aggregate layer can be excavated, and the PICP system is built in its entirety as designed. Once final road construction begins, prohibit construction traffic access over the open-graded aggregate subbase and base materials.

Another alternative solution would employ the use of a sacrificial layer of asphalt over the base (ASTM No. 57 aggregate). This approach would require the eventual removal of the asphalt layer and re-grading of the base layer before proceeding with setting the bed layer and paver installation.

Each of these options would allow immediate traffic flow after the permeable pavers have been installed, compacted and joint fill added. Protection of the pavers may or may not be required based on the stage at which they were installed, the projected use by the trades, and needs of the property owner. Plywood, fabric with chips, tarps and numerous other methods have been used in attempts to provide a protective layer over the paver surface, however, most have been costly and ineffective.

UTILITY REPAIRS

One advantage of PICP is that the pavers can be easily removed and reinstated for access to underground utilities. This important advantage allows the pavement surface to be utilized immediately after repairs are made.

Should utility repairs be required below the PICP surface, the pavers can be removed by hand without the use of saw cutting equipment or pneumatic jack hammers. Specialty equipment like a paver extractor can be used. Once the first paver is removed, it is relatively easy to remove the remaining pavers to beyond the extent of excavation. Set the pavers aside for future reinstallation. Undisturbed pavers can be secured with a wood or metal frame as shown in the Figure.

The bedding material (ASTM No. 8 Stone) encountered should be removed and disposed of, then replaced with new aggregate. The ASTM No. 57 base and ASTM No. 2 subbase can be carefully removed and stored separately for reinstallation. Care must be taken to prevent intermixing of the base and subbase materials, and store these materials in a place where the aggregates will remain clean. Any aggregates that become dirty or contaminated should be discarded and replaced.

Where repairs require excavation into the underlying subgrade soil, Oldcastle recommends using flowable concrete fill (200 to 500 psi) to support the repaired utility. The open graded base cannot adequately fill under pipes or boxes, nor can it be compacted in these places. When pouring the flowable fill, use a plastic sheet or geotextile to prevent the flowable fill from seeping into the ASTM No.2 Stone. A minimum 4-inch layer of flowable concrete fill should be used to cover a pipe or box structure.

When reinstalling the aggregates, place and level the ASTM No.2 stone in no more than 4-inch lifts and use a plate compactor to compact each lift; the thinner lift thickness is to accommodate the smaller sized compactor that will likely be used due to access limitations in the excavation. The ASTM No. 57 stone can be placed, leveled and compacted in one 4-inch thick lift. The setting bed of ASTM No. 8 stone shall then be placed and screeded in one 2-inch lift without compaction.

When reinstalling the pavers, place the pavers level with the adjacent pavers, or slightly higher to account for settlement of the underlying materials (based on the depth of excavation). In either scenario, the bedding layer should be 1/8-inch higher so that once the pavers are reinstalled and compacted, they should be the same elevation as the adjacent units. Once the desired grades are accomplished, sweep jointing material into the joints and vibrate into place; repeat until the joints are full. Belgard can provide an authorized paver contractor to reinstate pavers if required.

Replacement of a single broken or stained paver may be required. However, replacement is not recommended for isolated individual pavers with hairline cracks or other cracks than are not adversely affecting the structural performance of the pavement system. If the paver is otherwise intact and locked in place with little evidence

POST-CONSTRUCTION (PUNCHLIST) INSPECTION CHECKLIST

- ☐ The pavers utilized are the type, thickness, and dimensions specified in the construction documents.
- ☐ The pavers utilized are the type, thickness, and dimensions specified in the construction documents.
- ☐ Paver joint openings are filled with the specified aggregate to the bottom of the chamfer of the paver.
- ☐ The area around the permeable paver perimeter is stabilized and covered with required vegetation or specified surface material.
- ☐ Final paver surface elevations do not deviate by ± 3/8 in. over a 10ft. long straightedge.
- ☐ The surface elevation of the pavers is 1/8 in. to 1/4 in. above adjacent utility structures, concrete collars, channels, curbing, or edge restraints within designated ADA routes. Note: Vehicular areas may be 3/8 in. above adjacent structures outside of ADA routes.
- ☐ Lippage is not greater than 1/8 in. between adjacent pavers.
- ☐ Cracked paver units (if applicable) have been removed and replaced.
- ☐ The installed surface slope is in general conformance with the construction documents.
- ☐ Drains and outfalls (if applicable) related to the PICP system are constructed and functioning in general conformance with the construction documents.
- ☐ Observation wells (if applicable) related to the permeable pavement system have been installed in accordance with the construction drawings and have been accessed to confirm the reservoir is draining as designed (based on rain event size).
- ☐ Surface infiltration testing in accordance with ASTM C1781, Standard Test Method for Surface Infiltration Rate of Permeable Unit Pavement Systems, has been conducted within 60 days post-installation, and results exceed 100 inches/hour unless otherwise specified by the construction documents.

Oldcastle recommends that the contractor return to the site along with the owner and/or their representative 6-months after substantial completion to observe the permeable paver system and refill joints where joint infill is 1/2" or more below the chamfer of the pavers. Designers should include this requirement in the project specificatoins to ensure that it is included in the contractor's bid.

PAVER DESIGN CONCEPT

BELGARD®

This paver design concept has been prepared by Belgard Commercial for informational purposes only. Belgard Commercial provides design assistance, but in no way assumes the role of the engineer of record. The final site design and calculations are the responsiblity of the engineer of record.

Prepared By: Paul C. Cureton, P.E.
email: paul.cureton@oldcastle.com
phone: 224.762.1942

BELGARD®
PAVES THE WAY

Client: **PES**

Project Name: *Castle Rock City Hotel Courtyard*
Castle Rock, Colorado

Sheet Name: ***PICP O & M NOTES***

Sheet No: ***C3.0***
03.07.2024

ROUTINE MAINTENANCE

The initial Routine Maintenance cycle of a permeable pavement should commence 6 months from the substantial completion date of the project and be repeated every 12 months, or more frequently as needed. The objective is to remove debris and sediment from the surface with standard sweeping equipment such as power or manual brooms, blowers, mechanical sweepers or regenerative air vacuums.

It is not recommended to use power washing (i.e. pressure washers) to remove sediment within the joints or paver openings. The water will lubricate the sediment particles and force them further into the joint aggregates. In addition, excessive water will also create a slurry containing contaminants that may require special off-site disposal. Lawn maintenance personnel should be instructed to blow grass clippings away from permeable pavement and blow off any grass clippings, plant debris, or leaves that are deposited on the permeable pavement during lawn maintenance and landscaping operations.

A dry mechanical or regenerative air type sweeper may be used during dry periods to remove encrusted sediment, leaves, grass clippings, etc. Vacuum or sweeper settings may require adjustments to prevent uptake of aggregate from the paver voids or joints. Leaf blowers or other standard onsite manual methods that are used for standard pavement maintenance may be employed to remove this surface debris.

RESTORATIVE MAINTENANCE

In rare cases, excessive sediment loading can occur in PICP surfaces. These conditions are typically in isolated areas within the pavement (often along edges) and are usually due to contributory run-on. Fortunately PICP, unlike other types of porous pavements, provides vertical filter columns (joints with specific aggregate infill) that allow for the capture and extraction of sediment build-up within the paver openings. Remedial maintenance should be done utilizing a vacuum sweeper, such as the Elgin Whirlwind as shown below, or an equivalent. A regenerative air vacuum is more appropriately suited for Routine maintenance, as it only will remove the near-surface sediment. A true vacuum machine will remove the entire 3-inch column of joint aggregates.

Sediment collects within the joint or paver openings (voids). As particles attach to the interior infill aggregates, the fine particles bind together below the surface as shown. The majority of the particulate or sediment travel is limited to the near surface and typically does not advance more than 1-2-inches below the paver surface and typically does not reach the bedding layer. The ability for PICP to collect sediment near the surface is a key advantage to this type of infiltration system. Maintenance can be easily performed on the near-surface joint filters within a PICP system.

Municipal vacuum trucks and other equipment, even a shop vac, may be used for restorative maintenance in smaller areas. Restorative maintenance should be attempted in dry conditions and if removal is not achieved, flooding the area with water will help release the sediment under pressure from the vacuum source (water may be effective for Restorative maintenance).

Replace openings with joint fill (ASTM No. 8, 89, or 9) specified in the construction documents by sweeping joints full to within 1/2-inch from the top of the paver surface. Remove excess chip materials from surface, and pavement is ready for use.

Restorative maintenance is sometimes required on older installations not routinely maintained. An indication that restorative maintenance is needed is when rainwater ponds on permeable paver surfaces. In addition, on some land development or phased construction projects, permeable pavers are installed early in the project and often are subjected to significant sediment loading prior to overall project completion or owner acceptance. Project developers, HOAs, and municipal inspectors may require that the PICP system is restored to full surface infiltration capacity or to a minimum industry standard of 100 inches/hour to achieve final acceptance and approval. On these projects subject to sediment loading, Belgard Commercial recommends a restorative maintenance program be implemented to restore the PICP infiltration rate and jointing material.

ANNUAL INSPECTION & ROUTINE MAINTENANCE PROGRAM

The following items are minimum requirements for any annual PICP maintenance program:

An annual inspection is recommended in the spring after snow events have subsided for the year. The purpose of the annual inspection is to assess the functional condition of the permeable pavers as a structural pavement and stormwater control measure. Once the annual inspection is completed, routine maintenance activities should be performed to correct any deficiencies.

- ☐ Replenish paver joints with additional aggregate if the level is more than ½ in. below the bottom of the chamfer at the paver surface.
- ☐ Inspect vegetation around PICP perimeter for cover & soil stability, repair/replant as needed.
- ☐ Inspect and repair all paver surface deformations (depressions/settlement) exceeding 1/2 in.
- ☐ Repair paver heights offset by more than 1/4 in. above or below adjacent units, or offset by more than 1/8 in. lippage from paver-to-paver.
- ☐ Replace cracked paver units of medium and high severity impairing surface structural integrity.
- ☐ Check drains and outfalls (if existing) for the free flow of water. Remove any obstructions.
- ☐ Check observation wells (if existing) to confirm reservoir is draining (based on last measurable rain event).
- ☐ Conduct Routine Maintenance and increase frequency based on sediment loading.
- ☐ If evidence of surface excessive sedimentation exists, test surface infiltration rate using ASTM C1781. If pavement infiltration rate is < 100 in/hr. increase Routine Maintenance from annually to quarterly. If surface infiltration rates fall to 10 in/hr., employ a Restorative Maintenance program utilizing a high pressure air or vacuum methods to extract affected joint material and replace joint material with ASTM No. 8, 89 or 9 washed chip aggregates (based on original design requirements). In most cases, restorative cleaning will only be necessary in isolated locations. Retest surface infiltration rate to confirm reinstated areas exceed 100 in/hr. Repeat the restorative process as needed to exceed the 100 in/hr. criteria.

The initial routine maintenance cycle of a permeable pavement should commence 6 months from the PICP installation date, and be repeated every 12 months or more frequently as needed. The objective is to remove debris and sediment from the surface with standard sweeping equipment such as power or manual brooms, blowers, mechanical sweepers or regenerative air vacuums. Contact you Belgard Sales Representative for more maintenance information.

PAVER DESIGN CONCEPT

BELGARD

This paver design concept has been prepared by Belgard Commercial for informational purposes only. Belgard Commercial provides design assistance, but in no way assumes the role of the engineer of record. The final site design and calculations are the responsiblity of the engineer of record.

Prepared By: Paul C. Cureton, P.E.
email: paul.cureton@oldcastle.com
phone: 224.762.1942

BELGARD
PAVES THE WAY

Client: PES

Project Name: Castle Rock City Hotel Courtyard
Castle Rock, Colorado

Sheet Name: PICP O & M NOTES

Sheet No: C3.1
03.07.2024

GENERAL TOWN OF CASTLE ROCK LANDSCAPE PLAN STANDARD NOTES

1. FINAL LANDSCAPE AREA, COVERAGE AND PLANT QUANTITIES, SHALL MEET OR EXCEED QUANTITIES REPRESENTED IN THIS DRAWING AND SHALL CONFORM TO SUBSEQUENT SUBMITTAL REQUIREMENTS.
2. LOCATION OF PLANT MATERIALS ARE APPROXIMATED AND MAY CHANGE` SLIGHTLY DUE TO UNFORESEEN FIELD CONSTRAINTS.
3. ALL PLANTS ARE TO BE PROPERLY HYDROZONED PER TOWN OF CASTLE ROCK PLANT LIST.
4. DISTANCE OF TREES TO WET UTILITY LINES SHOULD BE A MINIMUM OF 10 FEET.
5. PERMANENT IRRIGATION IS REQUIRED FOR ALL LANDSCAPED AREAS GREATER THAN 500 SQUARE FEET, PER SECTION 4.2.3 OF THE LANDSCAPE AND IRRIGATION MANUAL.
6. DESIGN MUST ACCOMMODATE THE WATERING RESTRICTIONS AS OUTLINED IN THE TOWN OF CASTLE ROCK WATER USE MANAGEMENT PLAN (WUMP).
7. IRRIGATION SYSTEMS ARE TO BE DESIGNED TO OPERATE WITHIN THE TOWN OF CASTLE ROCK WATER USE MANAGEMENT PLAN.
8. IRRIGATION SYSTEMS ARE TO BE DESIGNED PER THE TOWN OF CASTLE ROCK LANDSCAPE AND IRRIGATION REGULATIONS SECTION 4.2.3 AND TO CORRELATE WITH THE USE TYPE ON THE PROPERTY AND THE DAWSON TRAILS WATER EFFICIENCY PLAN (WEP).
9. IF ANY TRANSFORMERS, GROUND-MOUNTED HVAC UNITS, UTILITY PEDESTALS, OR SIMILAR FEATURES EXISTING ON SITE, BUT NOT SHOWN ON THE SITE DEVELOPMENT PLAN, ADDITIONAL LANDSCAPING AND SCREENING MAY BE REQUIRED BASED UPON FIELD CONDITIONS DETERMINED DURING THE SITE INSPECTION. INSTALLATION WILL BE REQUIRED PRIOR TO THE FINAL INSPECTION AND THE ISSUANCE OF THE CERTIFICATE OF OCCUPANCY, AS APPLICABLE.
10. NO TREES, LARGE SHRUBS, OR PERMANENT STRUCTURES ARE ALLOWED IN WET UTILITY AND DRAINAGE EASEMENTS.
11. AN IRRIGATION PLAN IS REQUIRED WITH THE FIRST SUBMITTAL OF THE CONSTRUCTION DOCUMENTS. PLEASE SEE SECTIONS 3.1.2B AND 4.2.3 OF THE TOWN OF CASTLE ROCK LANDSCAPE AND IRRIGATION PERFORMANCE STANDARDS AND CRITERIA MANUAL FOR IRRIGATION SUBMITTAL AND DESIGN REQUIREMENTS. CHANGES TO THE LANDSCAPE PLAN MAY BE NECESSARY DUE TO CONSTRUCTION DOCUMENTS IRRIGATION PLAN REVIEW COMMENTS.
12. LANDSCAPE AND IRRIGATION SHALL BE INSTALLED BY A TOWN OF CASTLE ROCK REGISTERED LANDSCAPE CONTRACT PROFESSIONAL.
13. DEAD PLANT MATERIALS SHALL BE REMOVED AND REPLACED WITH HEALTHY PLANTING MATERIALS OF COMPARABLE SIZE AND SPECIES THAT MEET THE ORIGINAL INTENT OF THE APPROVED LANDSCAPE DESIGN WITHIN FORTY-FIVE(45) DAYS OR SOONER IN THE EVENT OF A CONTAGIOUS DISEASE OR INVASIVE INSECT SPECIES. TOWN OF CASTLE ROCK IS NOT RESPONSIBLE FOR PLANT REPLACEMENTS.
14. SLOPES STEEPER THAN 3:1 ARE NOT PERMITTED ON LANDSCAPE PLANS IN THE TOWN OF CASTLE ROCK.
15. NATURAL SURFACE TRAIL'S FINAL ALIGNMENT SHALL BE COORDINATED WITH THE TOWN'S TRAILS PLANNER, RICH HAVEL. NATURAL SURFACE TRAILS SHALL MEET THE TOWN'S SUSTAINABLE TRAILS GUIDELINES. NATURAL SURFACE TRAILS SHALL BE INSTALLED BY A PROFESSIONAL TRAILBUILDERS ASSOCIATION (PTBA) MEMBER OR EQUIVALENT.
16. ANY STREET SIGNS, STRIPING, STREET LIGHTS AND CURB RAMPS ARE CONCEPTUAL ONLY AND SUBJECT TO TOWN REVIEW WITH THE CONSTRUCTION DOCUMENTS. THESE ITEMS SHALL COMPLY WITH THE TOWN OF CASTLE ROCK'S REGULATIONS, STANDARDS AND REQUIREMENTS.
17. APPROVAL OF THIS SITE DEVELOPMENT PLAN DOES NOT CONSTITUTE APPROVAL OF ANY DEVIATIONS FROM TOWN OF CASTLE ROCK REGULATIONS AND STANDARDS. ALL DEVIATIONS FROM TOWN REGULATIONS AND STANDARDS ARE SUBJECT TO THE APPROPRIATE PROCEDURES FOR APPROVAL.
18. NO SOLID OBJECT (EXCLUDING FIRE HYDRANTS, TRAFFIC CONTROL DEVICES AND TRAFFIC SIGNS) EXCEEDING THIRTY (30) INCHES IN HEIGHT ABOVE THE FLOWLINE ELEVATIONS OF THE ADJACENT STREET, INCLUDING BUT NOT LIMITED TO BUILDINGS, UTILITY CABINETS, WALLS, FENCES, LANDSCAPE PLANTINGS, CROPS, CUT SLOPES, AND BERMS SHALL BE PLACED WITHIN SIGHT DISTANCE LINES AND SIGHT DISTANCE EASEMENTS.
19. ALL EMERGENCY ACCESS ROADS, EMERGENCY ACCESS GATES AND SIGNAGE SHALL COMPLY WITH THE TOWN OF CASTLE ROCK FIRE DEPARTMENT REQUIREMENTS AND SHALL BE MAINTAINED BY THE METROPOLITAN DISTRICT, HOMEOWNERS ASSOCIATION, OR OTHE PROPERTY MANAGEMENT ENTITY.

DOWNTOWN OVERLAY DISTRICT SITE INVENTORY TABLE

DOWNTOWN OVERLAY DISTRICT SITE INVENTORY TABLE*

Street Name/Tract	Frontage Linear Feet (LF)**	Large Canopy Trees *(1 tree per 22 LF)*		Ornamental Trees *(1 tree per 15 LF)*	Provided Trees (New & Existing)		Provided Plants From Sections **A**, **B** or **C**		Soil Prep (Cu. Yds. Per 1000 SF)	Separate Irrigation Meter (Yes/No)
					Large Canopy	Ornamental	Shrubs	Perrenials		
Perry Street	110	5	OR	7	0****	0****	8	37	4	no
		0	OR	0						
		0	OR	0						
		0	OR	0						

FOR EVERY REQUIRED LARGE CANOPY TREE, A CORRESPONDING NUMBER OF PLANTINGS FROM **A**, **B**, OR **C** WILL BE REQUIRED FOR EACH SITE PLAN.

A. Shrubs: Five (5) per required tree **B**. Perenials: Seven (7) per required tree **C**. Trees: One (1) per required tree

*Downtown Overlay District requirements can be found in Municiple Code Section 13.2

**Please provide the linear footage of frontage and clearly show on the Site Development Plan for all streets/tracts

*** A combination of large canopy and ornamental trees may be used to meet the minimum tree requirement

**** See TCV24-0035 for reduced tree requirement. If required site tree is dead or in poor, it shall be replaced with a minimum 3" caliper latge canopy deciduoud tree.

REGISTERED LANDSCAPE PROFESSIONAL

TOWN OF CASTLE ROCK REGISTERED PROFESSIONAL: DYLAN DETTMANN
STATE OF COLORADO LICENSE LANDSCAPE ARCHITECT #: LA #1401
COMPANY: NORRIS DESIGN
ADDRESS: 1101 BANNOCK STREET, DENVER, COLORADO 80204
PHONE: 303-575-4581
EMAIL: DDETTMANN@NORRIS-DESIGN.COM
DATE: 03/14/2025

LANDSCAPE SUMMARY TABLE

LANDSCAPE TYPE	SQUARE FOOTAGE	PERCENTAGE
TOTAL PROJECT SITE	15,310	100%
TOTAL AREA LANDSCAPE	373	3%
IRRIGATED SHRUB BED	373	100%

PLANT SCHEDULE

SYMBOL LEGEND — **Please add values/quantities in the shaded areas**

DECIDUOUS SHADE TREES	HYDROZONE		QUANTITY	1*
LARGE CANOPY DECIDUOUS SHADE TREES SHALL BE A MINIMUM OF 2'' INCHES IN CALIPER MEASURED SIX (6) INCHES ABOVE GROUND				
LARGE CANOPY DECIDUOUS SHADE TREES SHALL BE A MINIMUM OF 3'' INCHES IN CALIPER WHEN IN A GRATE OR PLANTED IN AREAS LESS THAN EIGHT (8) FEET IN WIDTH				
**Existing Ash Tree*				
DECIDUOUS SHADE TREES	HYDROZONE		QUANTITY	0
ORNAMENTAL TREES SHALL BE A MINIMUM OF 1.5'' INCHES IN CALIPER, MEASURED SIX (6) INCHES ABOVE GROUND				
EVERGREEN TREES	HYDROZONE		QUANTITY	0
EVERGREEN TREES SHALL BE A MINIMUM OF 6 FEET IN HEIGHT, MEASURED TO THE MID-POINT OF THE MOST RECENT YEAR'S GROWTH				
DECIDUOUS SHRUBS	HYDROZONE	LOW	QUANTITY	3
SHRUBS SHALL BE A MINIMUM OF FIVE (5) GALLON CONTAINER IN SIZE				
EVERGREEN SHRUBS	HYDROZONE	LOW	QUANTITY	5
SHRUBS SHALL BE A MINIMUM OF FIVE (5) GALLON CONTAINER IN SIZE				
ORNAMENTAL GRASSES	HYDROZONE	LOW	QUANTITY	26
ORNAMENTAL GRASSES SHALL BE A MINIMUM OF FIVE (5) GALLON CONTAINER IN SIZE				
PERENNIALS	HYDROZONE	LOW	QUANTITY	37
PERENNIALS, GROUND COVERS, AND VINES SHALL BE A MINIMUM OF ONE (1) GALLON CONTAINER IN SIZE				
ANNUAL PLANTING BEDS	HYDROZONE		AREA	0
ANNUALS SHALL BE SIZED SHALL BE APPROPRIATE TO APPLICATION, WHETHER FLATS, FOUR (4) INCH POTS OR LARGER AND SPACED TO PROVIDE SEVENTY-FIVE (75) PERCENT GROUND COVER				
NATIVE SEED	HYDROZONE		AREA	0
GRASS SEED PLANTING QUALITY AND QUANTITY IN IRRIGATED AREAS SHALL BE IN COMPLIANCE WITH NURSERY STANDARDS AND SHALL PROVIDE A MINIMUM GROUND COVER OF EIGHTY (80) PERCENT WITHIN THE FIRST GROWING SEASON				
APPROVED NATIVE GRASS SEED MIXES: [Low Grow Mix/Foothills Mix/Colorado Native Mix]				

**Choose one symbol for each tree category.*
***Choose one pattern for each category of ground cover, shrubs, and grasses.*

IRRIGATION ZONE	PLANT NAME *(COMMON)*	APPLICATION RATE *(INCHES/MONTH)*		LANDSCAPE ZONE	% OF IRRIGATED AREA (TA)	IA *(IRRIGATED AREA IN SQ FT FOR EACH ZONE)*	LWUR *(LANDSCAPE WATER USE RATING)*	TOTAL AREA *(TA)*	CLWUR *(LWUR X IA)/TA*
DRIP	SHRUB BED	2.0	in./mo.	LOW	100	373	2.0	373	2
TOTALS					100.00%	373			2.0
							TOTAL OF THE CLWUR		2.0

COMPOSITE LANDSCAPE WATER USE RATING CHART

LANDSCAPE ZONE	LWU RATING RANGE
VERY LOW WATER USE	0.0 to 1.5
LOW WATER USE	+1.5 to 3.0
MODERATE WATER USE	+3.0 to 4.5
HIGH WATER USE	+4.5

NOTES : THE LWUR RATING RANGE IS BASED ON POST ESTABLISHMENT WATERING SCHEDULES.

SYMBOL	CODE	DESCRIPTION	PRODUCT NAME	SUPPLIER/MANUFACTURER	CONTACT	MODEL #	COLOR / FINISH	SIZE / DIMENSIONS	DETAIL	NOTES
LANDSCAPE MATERIAL SCHEDULE										
	M-01	SHRUB BED	1 1/2" RIVER ROCK MULCH	PIONEER SAND OR APPROVED EQUAL	PIONEERCO.COM		RIVER ROCK BLEND	1 1/2", MIN 3" DEPTH		
	M-02	CRUSHER FINES	CRUSHER FINES	PIONEER SAND OR APPROVED EQUAL	PIONEERCO.COM		RE: ARCH	3" MIN DEPTH		INSTALL PER MANUFACTURER`S SPECIFICATIONS
	M-03	STEEL EDGING	ROLLED TOP STEEL EDGING	RYERSON OR APPROVED EQUAL			BLACK	3/16" X 4" X 16"		INSTALL PER MANUFACTURER`S SPECIFICATIONS
SYMBOL	CODE	DESCRIPTION	PRODUCT NAME	MANUFACTURER	CONTACT	MODEL #	COLOR / FINISH	SIZE / DIMENSIONS	DETAIL	NOTES
PAVEMENT SCHEDULE										
	P-01	PERVIOUS PAVER	PERVIOUS PAVER	RE: ARCH						

PLANT SCHEDULE

CODE	QTY	BOTANICAL NAME	COMMON NAME	ROOT	SIZE	WATER USE	HEIGHT	SPREAD
DECIDUOUS SHRUBS								
PH OP	3	PHYSOCARPUS OPULIFOLIUS 'DART'S GOLD'	DART'S GOLD NINEBARK	CONT.	#5	MOD	4`-5`	4`-5`
EVERGREEN SHRUBS								
PM MO	5	PINUS MUGO `MOPS`	MOPS MUGO PINE	CONT.	#5	LOW	1`-2`	5`-6`
ORNAMENTAL GRASSES								
CA KF	24	CALAMAGROSTIS X ACUTIFLORA `KARL FOERSTER`	KARL FOERSTER FEATHER REED GRASS	CONT.	#1	LOW	4`-5`	1`-2`
PE HA	2	PENNISETUM ORIENTALE 'HAMELM'	HAMELM FOUNTAIN GRASS	CONT.	#1	MOD	2`-3`	2`-3`
PERENNIALS								
AC ML	9	ALCHEMILLA MOLLIS	LADY'S MANTLE	CONT.	#1	LOW	1`-2`	1`-2`
HE XL	22	HEUCHERA X 'LAVA LAMP'	LAVA LAMP CORAL BELLS	CONT.	#1	LOW	1`-2`	1`-2`
SA MN	6	SALVIA X SYLVESTRIS `MAY NIGHT`	MAY NIGHT SALVIA	CONT.	#1	LOW	1`-2`	1`-2`

NORTH

0 5 10 20
1 inch = 10 ft. Horizontal

PROFESSIONAL ENGINEER CERTIFICATION

I HEREBY AFFIRM THAT THESE FINAL CONSTRUCTION PLANS WERE PREPARED UNDER MY DIRECT SUPERVISION, IN ACCORDANCE WITH ALL APPLICABLE TOWN OF CASTLE ROCK AND STATE OF COLORADO STANDARDS AND STATUTES, RESPECTIVELY; AND THAT I AM FULLY RESPONSIBLE FOR ALL DESIGN AND REVISIONS RELATIVE TO SAID PLANS.

STEPHEN M. DOUGLAS, P.E.
REGISTERED LICENSED PROFESSIONAL ENGINEER
STATE OF COLORADO No. 41176
FOR AND ON BEHALF OF
PERSONALIZED ENGINEERING SOLUTIONS, LLC
(720)388-8126

TOWN OF CASTLE ROCK APPROVAL
PLANS ARE HEREBY APPROVED FOR ONE YEAR FROM DATE OF DEVELOPMENT SERVICES APPROVAL

APPROVED BY:

DEVELOPMENT SERVICES

DATE	REVISION DESCRIPTION
MAR 14 2025	INITIAL CIVIL CD SUBMITTAL

NORRIS DESIGN
PEOPLE + PLACEMAKING

Drawing Name: PLAN-CITY HOTEL-LAND.dwg
Job Number: CITY HOTEL
Prepared For: WHITE DEVELOPMENT
Designer: SMD | Drafter: SN | Checked: SMD

PES Personalized Engineering Solutions
Personalized Engineering Solutions, LLC
9249 S. Broadway #200-388
Highlands Ranch, CO 80129 720.388.8126
www.pengsolutions.com
Construction Management Civil Engineering Land Planning

CITY HOTEL, CASTLE ROCK
CONSTRUCTION DOCUMENTS
LANDSCAPE NOTES

Sheet 21 of 29
Date MARCH 2025

PATH: P:\CITY HOTEL - 1355-01-3838\DRAWINGS\CONSTRUCTION DOCUMENTS\PLAN-CITY HOTEL-LAND.DWG
PLOTTED BY: S. DOUGLAS PLOT DATE: 3/14/2025 12:11 PM

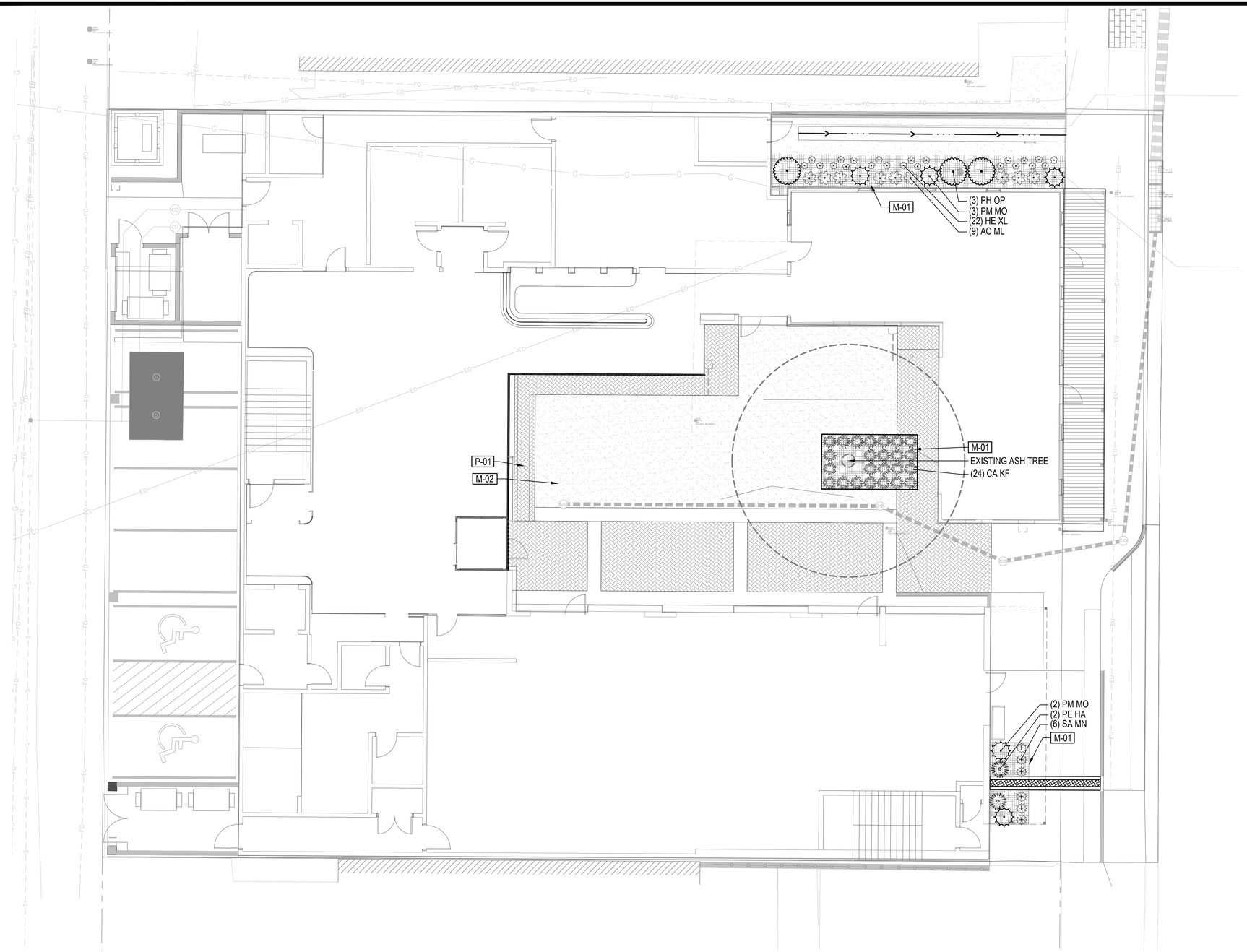

CODE	LANDSCAPE MATERIALS DESCRIPTION
M-01	SHRUB BED
M-02	CRUSHER FINES
	EXISTING ASH TREE

CODE	PAVEMENT DESCRIPTION
P-01	PERVIOUS PAVER

PLANT SCHEDULE

CODE	COMMON NAME
DECIDUOUS SHRUBS	
PH OP	DART'S GOLD NINEBARK
EVERGREEN SHRUBS	
JU BS	BLUE STAR JUNIPER
PM MO	MOPS MUGO PINE
ORNAMENTAL GRASSES	
PE HA	HAMELM FOUNTAIN GRASS
CA KF	KARL FOERSTER FEATHER REED GRASS
PERENNIALS	
AC ML	LADY'S MANTLE
HE XL	LAVA LAMP CORAL BELLS
SA MN	MAY NIGHT SALVIA

PROFESSIONAL ENGINEER CERTIFICATION

I HEREBY AFFIRM THAT THESE FINAL CONSTRUCTION PLANS WERE PREPARED UNDER MY DIRECT SUPERVISION, IN ACCORDANCE WITH ALL APPLICABLE TOWN OF CASTLE ROCK AND STATE OF COLORADO STANDARDS AND STATUTES, RESPECTIVELY; AND THAT I AM FULLY RESPONSIBLE FOR ALL DESIGN AND REVISIONS RELATIVE TO SAID PLANS.

STEPHEN M. DOUGLAS, P.E.
REGISTERED LICENSED PROFESSIONAL ENGINEER
STATE OF COLORADO No. 41176
FOR AND ON BEHALF OF
PERSONALIZED ENGINEERING SOLUTIONS, LLC
(720)388-8126

TOWN OF CASTLE ROCK APPROVAL
PLANS ARE HEREBY APPROVED FOR ONE YEAR FROM DATE OF DEVELOPMENT SERVICES APPROVAL

APPROVED BY:

DEVELOPMENT SERVICES

811

NORTH

0 4 8 16
SCALE 1/8" =1'-0"

NORTH

0 5 10 20
1 inch = 10 ft. Horizontal

DATE	REVISION DESCRIPTION
MAR 14 2025	INITIAL CIVIL CD SUBMITTAL

NORRIS DESIGN
PEOPLE + PLACEMAKING

Drawing Name: PLAN-CITY HOTEL-LAND.dwg
Job Number: CITY HOTEL
Prepared For: WHITE DEVELOPMENT

Designer	Drafter	Checked
SMD	SN	SMD

PES Personalized Engineering Solutions
Personalized Engineering Solutions, LLC
9249 S. Broadway #200-388
Highlands Ranch, CO 80129 720.388.8126
www.pengsolutions.com
Construction Management Civil Engineering Land Planning

CITY HOTEL, CASTLE ROCK
CONSTRUCTION DOCUMENTS
LANDSCAPE PLAN

Sheet 22 of 29

Date MARCH 2025

PATH: P:\CITY HOTEL - 1355-01-3838\DRAWINGS\CONSTRUCTION DOCUMENTS\PLAN-CITY HOTEL-LAND.DWG
PLOTTED BY: S. DOUGLAS PLOT DATE: 3/14/2025 12:11 PM

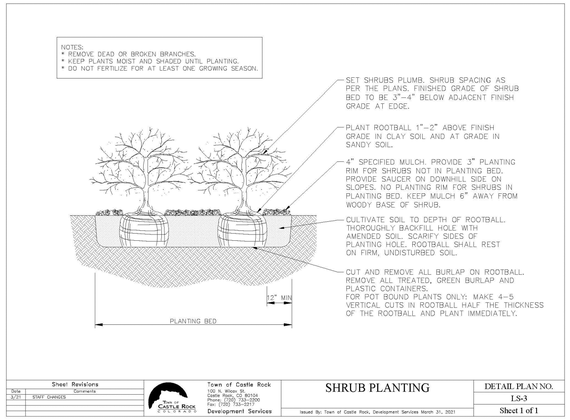

1 SHRUB PLANTING

SCALE: NTS

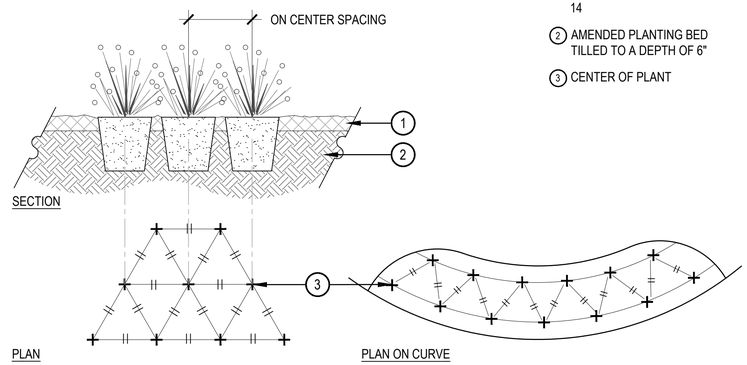

1. SPECIFIED MULCH, REFER TO MATERIAL SCHEDULE, SHEET 14
2. AMENDED PLANTING BED TILLED TO A DEPTH OF 6"
3. CENTER OF PLANT

NOTES:
1. WHEN PLANTED ON A CURVE, ORIENT ROWS TO FOLLOW THE LONG AXIS OF AREAS WHERE PLANTS ARE MASSED.

2 PERENNIAL PLANT LAYOUT

SCALE: 1" = 1'-0"

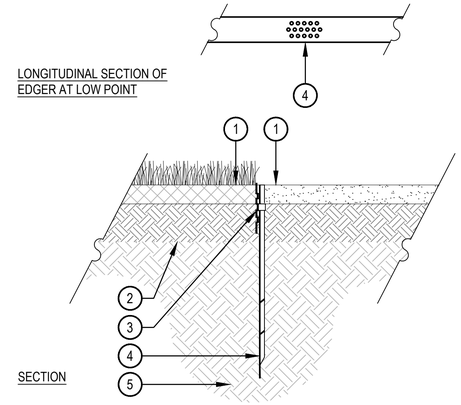

1. FINISHED GRADE, TOP OF SOD THATCH LAYER AND TOP OF MULCH OR CRUSHER FINES SHALL BE FLUSH WITH TOP OF EDGER
2. AMENDED SOIL PER SPECIFICATIONS
3. METAL EDGER, DRILL (16) 1/2" DIAMETER HOLES 1" ON CENTER MINIMUM AT ALL LOW POINTS OR POORLY DRAINING AREAS IN ORDER TO ENSURE ADEQUATE DRAINAGE
4. EDGER STAKE
5. SUBGRADE COMPACTED TO 95% STANDARD PROCTOR DENSITY

NOTES:
1. THERE SHALL BE NO EXPOSED SHARP/ JAGGED EDGES.
2. CONTRACTOR SHALL INSTALL STAKES AS REQUIRED BY THE MANUFACTURER.
3. ENSURE POSITIVE DRAINAGE.

3 METAL EDGER

SCALE: 1" = 1'-0"

NORTH

0 5 10 20

1 inch = 10 ft. Horizontal

PROFESSIONAL ENGINEER CERTIFICATION

I HEREBY AFFIRM THAT THESE FINAL CONSTRUCTION PLANS WERE PREPARED UNDER MY DIRECT SUPERVISION, IN ACCORDANCE WITH ALL APPLICABLE TOWN OF CASTLE ROCK AND STATE OF COLORADO STANDARDS AND STATUTES, RESPECTIVELY; AND THAT I AM FULLY RESPONSIBLE FOR ALL DESIGN AND REVISIONS RELATIVE TO SAID PLANS.

STEPHEN M. DOUGLAS, P.E.
REGISTERED LICENSED PROFESSIONAL ENGINEER
STATE OF COLORADO No. 41176
FOR AND ON BEHALF OF
PERSONALIZED ENGINEERING SOLUTIONS, LLC
(720)388–8126

TOWN OF CASTLE ROCK APPROVAL
PLANS ARE HEREBY APPROVED FOR ONE YEAR FROM DATE OF DEVELOPMENT SERVICES APPROVAL

APPROVED BY:

DEVELOPMENT SERVICES

DATE	REVISION DESCRIPTION
MAR 14 2025	INITIAL CIVIL CD SUBMITTAL

NORRIS DESIGN
PEOPLE + PLACEMAKING

Drawing Name: PLAN-CITY HOTEL-LAND.dwg			
Job Number: CITY HOTEL			
Prepared For: WHITE DEVELOPMENT	Designer: SMD	Drafter: SN	Checked: SMD

PES Personalized Engineering Solutions
Personalized Engineering Solutions, LLC
9249 S. Broadway #200-388
Highlands Ranch, CO 80129 720.388.8126
www.pengsolutions.com
Construction Management Civil Engineering Land Planning

CITY HOTEL, CASTLE ROCK
CONSTRUCTION DOCUMENTS
LANDSCAPE DETAILS

Sheet 23 of 29

Date MARCH 2025

PATH: P:\CITY HOTEL - 1355-01-3838\DRAWINGS\CONSTRUCTION DOCUMENTS\PLAN-CITY HOTEL-LAND.DWG
PLOTTED BY: S. DOUGLAS PLOT DATE: 3/14/2025 12:11 PM

IRRIGATION GENERAL NOTES

1. THE CONTRACTOR SHALL PROVIDE ALL LABOR, MATERIALS AND EQUIPMENT NECESSARY TO INSTALL THE IMPROVEMENTS SHOWN ON THE PLANS.
2. THE CONTRACTOR SHALL COORDINATE AS NECESSARY WITH THE GENERAL CONTRACTOR AND OWNER'S REPRESENTATIVE FOR SUCCESSFUL COMPLETION OF THIS WORK.
3. ALL IRRIGATION EQUIPMENT IS TO BE AS SPECIFIED OR APPROVED EQUAL PER THE DISCRETION OF THE OWNER'S REPRESENTATIVE. THE CONTRACTOR ASSUMES ALL LIABILITY ASSOCIATED WITH THE MODIFICATION OF THE IRRIGATION SYSTEM DESIGN WITHOUT NOTIFYING THE OWNER'S REPRESENTATIVE.
4. IT IS THE CONTRACTOR'S RESPONSIBILITY TO CONDUCT A THOROUGH SITE INSPECTION AND REVIEW OF THE PROJECT CONSTRUCTION DOCUMENTS INCLUDING BUT NOT LIMITED TO THE FOLLOWING: LANDSCAPE PLAN, UTILITY PLAN, CIVIL UTILITY PLAN, ARCHITECTURE PLAN, GRADING AND DRAINAGE PLAN AND ALL OTHER ASSOCIATED PLANS AND SPECIFICATIONS THAT AFFECT THIS WORK PRIOR TO START OF WORK. IF THE AND CONTRACTOR OBSERVES ANY DISCREPANCIES AMONG THE CONSTRUCTION DOCUMENTS AND THE EXISTING CONDITIONS ON SITE, IT IS THEIR RESPONSIBILITY TO CONTACT THE OWNER'S REPRESENTATIVE IMMEDIATELY.
5. THE CONTRACTOR MUST VERIFY THE LOCATION OF ALL PUBLIC AND PRIVATE UNDERGROUND UTILITIES PRIOR TO CONSTRUCTION. IF THE CONTRACTOR FAILS TO DO SO AND DAMAGES ANY UNDERGROUND UTILITIES. THE CONTRACTOR SHALL PAY FOR ANY REPAIR WORK ASSOCIATED WITH SAID DAMAGES.
6. IT IS THE CONTRACTOR'S RESPONSIBILITY TO ENSURE ADEQUATE VERTICAL AND HORIZONTAL SEPARATION BETWEEN ALL IRRIGATION DISTRIBUTION LINES AND ALL UTILITIES (EXISTING OR PROPOSED), CONDUIT, STORM WATER COMPONENTS, DRAINS, ETC.
7. THE CONTRACTOR SHALL CONFORM TO ALL LOCAL AND STATE REGULATIONS AND INSTALL THE IRRIGATION SYSTEM AND ITS COMPONENTS PER MANUFACTURER'S SPECIFICATIONS. THE CONTRACTOR SHALL OBTAIN AND PROVIDE PAYMENT FOR ALL PERMITS REQUIRED BY ANY LOCAL AND STATE AGENCIES AND UTILITY COMPANIES HAVING JURISDICTION OVER THIS SITE.
8. THE CONTRACTOR IS RESPONSIBLE FOR SCHEDULING AND PAYING FOR CERTIFICATION OF THE BACKFLOW PREVENTER BY A STATE CERTIFIED INSPECTOR. THE CONTRACTOR SHALL PROVIDE CERTIFICATES TO OWNER'S REPRESENTATIVE PRIOR TO PROJECT ACCEPTANCE.
9. IT IS THE INTENT OF THIS DESIGN THAT ALL IRRIGATION EQUIPMENT BE INSTALLED WITHIN LANDSCAPE AREAS AND WITHIN THE PROJECT LIMITS. EQUIPMENT SHOWN OUTSIDE OF THESE LIMITS IS SHOWN FOR GRAPHIC CLARITY ONLY. IF THERE IS A QUESTION REGARDING THE LOCATION OF ANY COMPONENT OF THE IRRIGATION SYSTEM, IT IS THE CONTRACTOR'S RESPONSIBILITY TO CONTACT THE OWNER'S REPRESENTATIVE. IF THE CONTRACTOR NEGLECTS TO NOTIFY THE NECESSARY PARTIES, THE CONTRACTOR SHALL PAY FOR ANY REPLACEMENT OR MODIFICATION TO ENSURE PROPER LOCATION AND OPERATION OF THE IRRIGATION SYSTEM AND ITS COMPONENTS.
10. ALL IRRIGATION DISTRIBUTION LINES AND EQUIPMENT INCLUDING BUT NOT LIMITED TO, MAINLINE, LATERALS, SPRAY HEADS, DRIP EMITTERS SHALL BE KEPT A MINIMUM DISTANCE OF 6' AWAY FROM ALL BUILDING AND WALL FOUNDATIONS, OR AS STIPULATED IN THE GEOTECHNICAL REPORT , WHICHEVER IS GREATER. EQUIPMENT MAY BE SHOWN IN THIS AREA FOR GRAPHIC CLARITY. COORDINATE ALL REQUIRED SETBACKS WITH OWNER'S REPRESENTATIVE PRIOR TO START OF WORK.
11. EACH VALVE SHALL BE INSTALLED IN A SEPARATE VALVE BOX AS DETAILED. ALL VALVE BOXES AND LIDS SHALL BE COMMERCIAL GRADE, PLASTIC WITH SELF LOCKING COVERS. LID COLOR TO BE GREEN. INSTALL FLUSH TO FINISH GRADE AND PER CONSTRUCTION DETAILS. DO NOT INSTALL IN PAVED AREAS OR IN BOTTOMS OF DRAINAGE SWALES/BASINS.
12. CONTRACTOR SHALL INSTALL DETECTABLE MARKING TAPE OR #14g DIRECT BURY TRACER WIRE IN ALL PRESSURE MAINLINE TRENCHES. SEE IRRIGATION DETAILS FOR MORE INFORMATION.
13. PLANT MATERIAL LOCATIONS TAKE PRECEDENCE OVER ROUTING OF IRRIGATION PIPING. COORDINATE INSTALLATION OF IRRIGATION EQUIPMENT SO THAT IT DOES NOT INTERFERE WITH THE PLANTING OF TREES OR OTHER LANDSCAPE MATERIAL.
14. THE CONTRACTOR SHALL MARK THE LOCATION OF THE MAINLINE, CONTROL VALVES, GATE VALVES AND HEAD LAYOUT OF A REPRESENTATIVE SPRAY ZONE. SCHEDULE A REVIEW WITH THE OWNER'S REPRESENTATIVE PRIOR TO INSTALLATION.
15. INSTALL SCH. 40 BALL WITH OPERATIONAL INDICATOR AT ENDS OF ALL DRIP LATERALS AS DETAILED. FLUSH ALL LATERALS THOROUGHLY BEFORE INSTALLING EMITTERS AND BUBBLERS.
16. CONTRACTOR SHALL FINE TUNE AND ADJUST NOZZLE DIRECTION AND RADIUS TO REDUCE OVERSPRAY ONTO PAVING OR HARD SURFACES.
17. CONTRACTOR SHALL INSTALL A QUICK COUPLER IN 10" VALVE BOX AT THE END OF ALL BRANCHES OF THE MAINLINE, OR AS SHOWN ON PLANS, FOR WINTERIZATION AND FLUSHING OF MAINLINE.
18. THE CONTRACTOR SHALL PERFORM A PRESSURE TEST ON ALL MAINLINES. CONTRACTOR SHALL PRESSURIZE MAINLINES TO 120 PSI AND MAINTAIN PRESSURE AT 120 PSI FOR A MINIMUM CONTINUOUS PERIOD OF TWO (2) HOURS TO ACHIEVE FINAL ACCEPTANCE.
19. THIS IRRIGATION SYSTEM HAS BEEN DESIGNED TO OPERATE DURING A THREE(3) NIGHT PER WEEK, SIXTEEN(16) HOURS PER NIGHT WATERING WINDOW. DRIP IRRIGATION ZONES MAY BE ALLOWED TO RUN ON A SEPARATE SCHEDULE FROM THIS WATER WINDOW DEPENDING JURISDICTION. LANDSCAPE ESTABLISHMENT WILL REQUIRE INCREASED IRRIGATION WATER FOR DURATION OF THE ESTABLISHMENT PERIOD AND MAY REQUIRE TWICE THE AMOUNT OF WATER AS ESTABLISHED PLANT MATERIAL. THE CONTRACTOR SHALL COORDINATE WATERING SCHEDULES AND APPLICATION RATES WITH THE OWNER'S REPRESENTATIVE PRIOR TO FINAL ACCEPTANCE.
20. THE DESIGN IS BASED ON THE FOLLOWING PROJECTED PEAK SEASON WEEKLY APPLICATION RATES AFTER ESTABLISHMENT. THESE FIGURES WILL NEED TO BE ADJUSTED DUE TO SEASONAL CHANGES AND VARIABLE WEATHER CONDITIONS.
    - TREE, SHRUB, AND PERENNIAL PLANT MATERIAL 1.00" PER WEEK PEAK SEASON
21. THE CONTRACTOR SHALL PROVIDE A SEASONAL MAINTENANCE SCHEDULE WHICH SHALL BEGIN ON APRIL 15TH AND END ON OCTOBER 15TH TO ENSURE THE EFFICIENCY AND LONGEVITY OF THE IRRIGATION SYSTEM. THE MAINTENANCE SCHEDULE SHALL INCLUDE BUT IS NOT LIMITED TO THE FOLLOWING LIST OF BEST MANAGEMENT PRACTICES:
    - CHECK HEADS FOR COVERAGE AND LEAKAGE.
    - CHECK CONTROLLER PROGRAMMING AND ADJUST FOR SEASONAL CHANGES AS NECESSARY.
    - VERIFY THAT THE WATER SUPPLY AND PRESSURE ARE AS STATED IN THE DESIGN.
    - CERTIFY THE BACKFLOW PREVENTION DEVICE AND SUBMIT TEST RESULTS TO THE PROPERTY MANAGER.
    - PERIODICALLY VERIFY THE THE SENSORS IN THE IRRIGATION SYSTEM ARE OPERATING CORRECTLY.
    - WINTERIZATION AND SPRING START UP PROCEDURES.

SLEEVING COORDINATION NOTES

1. INSTALLATION OF IRRIGATION SLEEVING IS THE RESPONSIBILITY OF THE GENERAL CONTRACTOR. THE GENERAL CONTRACTOR SHALL COORDINATE WITH THE IRRIGATION CONTRACTOR FOR LOCATION AND SIZING OF SLEEVES PRIOR TO THE START OF CONSTRUCTION.
2. SLEEVES SHALL BE INSTALLED PRIOR TO THE START OF PAVING OPERATIONS.
3. THE CONTRACTOR SHALL SLEEVE ALL IRRIGATION DISTRIBUTION LINES, VALVE CONTROL WIRES AND COMMUNICATION WIRES UNDER ALL PAVED SURFACES, WALL FOOTERS, DRAINAGE CHANNELS, INLETS, CATCH BASINS, ETC.
4. ALL SLEEVES SHALL EXTEND A MINIMUM OF 12" BEYOND EDGE OF ALL OBSTRUCTIONS. NO TEES, ELLS OR OTHER TURNS IN PIPING SHALL BE LOCATED UNDER ANY OBSTRUCTIONS.
5. EACH PIPE SHALL BE IN A SEPARATE SLEEVE. WIRES SHALL BE IN A SEPARATE PIPE UNDER ALL PAVED SURFACES.
6. SLEEVING SHALL BE INSTALLED PER THE SIZES AND QUANTITIES SHOWN ON THE PLANS BASED ON THE CHART BELOW.

PIPING	REQUIRED SLEEVE SIZE
LATERAL PIPING	2X NOMINAL DIAMETER OF LATERAL
CONTROL WIRES	2" CLASS 200 PVC

IRRIGATION POINT OF CONNECTION NOTES

1. POINT OF CONNECTION: THERE IS ONE (1) POINT OF CONNECTION ON THIS PROJECT.
   POC #1 : 3/4" DEDICATED IRRIGATION WATER STUB LOCATED OUTSIDE THE BUILDING WATER ENTRY ROOM.
   - CONTRACTOR IS TO LOCATE AND CONNECT DOWNSTREAM OF THE DEDICATED POTABLE IRRIGATION WATER STUB (PROVIDED BY OTHERS) WITH TYPE K COPPER AT A DEPTH OF 48" OR PER LOCAL CODE, WHICHEVER IS GREATER. EXTEND COPPER TO BACKFLOW PREVENTION UNIT. EXTEND COPPER TUBING MINIMUM 30" HORIZONTAL FROM BACKFLOW PREVENTER AND INSTALL ONE MANUAL DRAIN, TRANSITION TO AND EXTEND CLASS 200 PVC MAINLINE TO THE 1" QUICK COUPLER, MASTER VALVE, FLOW SENSOR, GATE VALVE, AND EXTEND MAINLINE TO VALVES AS SHOWN.
   - ALL PIPING FROM THE DEDICATED POTABLE IRRIGATION STUB THROUGH DRAIN VALVE DOWNSTREAM OF THE BACKFLOW PREVENTION UNIT SHALL BE THE SAME SIZE AS THE METER UNLESS OTHERWISE NOTED.
   - THE CONTRACTOR SHALL CONFORM TO ALL LOCAL CODES, OBTAIN AND PROVIDE PAYMENT FOR ALL PERMITS ASSOCIATED WITH THIS WORK. FINAL LOCATION OF BACKFLOW PREVENTION UNIT SHALL BE APPROVED BY THE OWNER'S REPRESENTATIVE PRIOR TO INSTALLATION.
2. CONTROLLER LOCATION: THERE IS ONE (1) CONTROLLER ON THIS PROJECT.
   CONTROLLER A : WALL MOUNTED CONTROLLER LOCATED IN PROXIMITY TO POC #1.
   - CONTROLLER SHALL BE PROGRAMMED TO RUN MULTIPLE VALVES AT ONE TIME WITH A MAXIMUM TOTAL OF 10 GPM .
   - CONTROLLER, TO BE MOUNTED PER DETAILS AND MANUFACTURER'S SPECIFICATIONS.
   - CONTRACTOR TO COORDINATE WITH OWNER'S REPRESENTATIVE AND ELECTRICAL PLANS FOR POWER SERVICE. ALL ELECTRICAL EQUIPMENT AND POWER CONNECTION INSTALLATION SHALL CONFORM TO ALL LOCAL CODES. INSTALL A LINE VOLTAGE SURGE DEVICE (INTERMATIC AG2401C3/ OR SQUARE D SDSA1175) FOR 120V IN A JUNCTION BOX PRIOR TO CONTROLLER.
   - RAIN/FREEZE SENSOR: MOUNT THE RAIN SENSOR ON BUILDING EAVE IN PROXIMITY TO THE CONTROLLER. THE SENSOR SHALL BE MOUNTED IN A LOCATION IN FULL SUN AND OPEN TO RAINFALL. SENSOR SHALL BE NO MORE THAN 200' FROM WIRELESS RECEIVER. MOUNT WIRELESS RECEIVER ON OR ADJACENT TO THE IRRIGATION CONTROLLER.
3. SYSTEM PRESSURE: THE SYSTEM HAS BEEN DESIGNED PER THE FOLLOWING SPECIFICATIONS: REQUIRED MINIMUM STATIC PRESSURE OF 37 PSI AND MAXIMUM SAFE VELOCITY OF 5 FPS IN ANY PVC PIPE AND 7.5 FPS IN ANY COPPER PIPE.
   - PER RJA ENGINEERING THE STATIC PRESSURE ON SITE IS APPROXIMATELY 45 PSI.
   - THE CONTRACTOR IS RESPONSIBLE FOR VERIFYING THE PRESSURE IN THE FIELD AT THE POINT OF CONNECTION BEFORE CONSTRUCTION BEGINS AND FOR NOTIFYING THE OWNER'S REPRESENTATIVE OF ANY DISCREPANCY BETWEEN THE DESIGN PRESSURE OF THE SYSTEM AND THE MEASURED PRESSURE IN THE FIELD. IF THE CONTRACTOR FAILS TO NOTIFY OWNER'S REPRESENTATIVE OF SUCH DISCREPANCIES, THEN THE CONTRACTOR ASSUMES ALL LIABILITY AND COSTS ASSOCIATED WITH SYSTEM MODIFICATIONS TO ACCOMMODATE THE ACTUAL PRESSURE.
   - FLOW SENSOR: SENSOR REQUIRES A MINIMUM FLOW FOR PROPER READINGS. MULTIPLE ZONES MAY BE REQUIRED TO RUN SIMULTANEOUSLY TO ACHIEVE THE MINIMUM FLOWS REQUIRED. CONTRACTOR TO SET 'K' VALUES PER MANUFACTURER.
4. FLOW SENSOR REQUIRES A MINIMUM FLOW OF 0.3 GPM.
5. COMMUNICATION: IT IS RECOMMENDED THAT THE IRRIGATION CONTROLLER BE CONNECTED TO A WATER MANAGEMENT CONTROL SOFTWARE FOR OPTIMUM FUNCTION OF THE IRRIGATION SYSTEM. COORDINATE WITH OWNER'S REPRESENTATIVE AND CONTACT THE LOCAL CONTROLLER MANUFACTURER REPRESENTATIVE OR AUTHORIZED VENDOR PRIOR TO ORDERING CONTROLLER FOR COMMUNICATION AND CONNECTIVITY OPTIONS.

CONVENTIONAL WIRE NOTES

1. GROUNDING FOR THE IRRIGATION CONTROLLER SHALL BE INSTALLED PER THE MANUFACTURER'S SPECIFICATIONS AND PER THE AMERICAN SOCIETY OF IRRIGATION CONSULTANTS GUIDELINE 100-2002 FOR EARTH GROUNDING ELECTRONIC EQUIPMENT IN IRRIGATION SYSTEMS FOUND AT www.asic.org/Design_Guides.aspx. FOR TECHNICAL SUPPORT REGARDING THE IRRIGATION CONTROLLER OR GROUNDING PLEASE CONTACT THE MANUFACTURER.
2. NEW CONTROLLER WIRE SHALL BE 14GA MIN. UL APPROVED WIRE. CONTRACTOR SHALL VERIFY EXISTING CONNECTIONS AND USE UL APPROVED WIRE STRIPPER AND 3M DBY WATERPROOF CONNECTIONS AT ALL NEW SPLICES AND CONNECTION POINTS. CONTRACTOR TO INSTALL RED ELECTRIC MARKING TAPE WITH CONTROLLER WIRE THAT IS NOT WITH MAINLINE. WIRES SHALL BE BUNDLED TOGETHER BY BLACK ELECTRICAL TAPE EVERY 10 L.F.
3. CONTRACTOR SHALL HAVE 30" OF SPARE CONTROL WIRE PRESENT AT ALL SPLICE POINTS. SPARE WIRE SHALL BE COILED IN A NEAT AND ORDERLY FASHION AT EACH SLICE POINT.
4. CONTRACTOR SHALL EXTEND TWO (2) SPARE CONTROL WIRES, AND ONE (1) SPARE COMMON WIRE AT THE END OF THE MAINLINE. CONTRACTOR SHALL INSTALL ONE (1) WIRE PULL BOX AT EACH END OF THE MAINLINE.

CASTLE ROCK STANDARD IRRIGATION NOTES

1. INSTALLING CONTRACTOR SHALL CONTACT THE TOWN OF CASTLE ROCK UTILITIES DEPARTMENT AT 720.733.6017 TO SCHEDULE A PRE-CONSTRUCTION MEETING BEFORE BEGINNING THE INSTALLATION OF THE IRRIGATION SYSTEM.
2. IRRIGATION SHALL BE INSTALLED BY A TOWN OF CASTLE ROCK REGISTERED LANDSCAPE CONTRACT PROFESSIONAL.
3. THE IRRIGATION SYSTEM SHALL BE EQUIPPED WITH A BACKFLOW PREVENTION ASSEMBLY APPROVED BY THE TOWN OF CASTLE ROCK.
4. BACKFLOW TO BE TESTED BY A CERTIFIED BACKFLOW TECHNICIAN APPROVED BY THE UTILITY DEPARTMENT WITHIN 10 DAYS OF THE IRRIGATION METER INSTALLATION AND ANNUALLY THEREAFTER.
5. IRRIGATION TAP, LINE, METER AND BACKFLOW PREVENTION ASSEMBLY MUST BE THE SAME SIZE FROM THE TAP TO A MINIMUM DISTANCE OF 10 PIPE DIAMETERS PAST THE BACKFLOW PREVENTION ASSEMBLY AND WINTERIZATION TEE.
6. WATER WASTE IS NOT ALLOWED PER THE TOWN OF CASTLE ROCK'S WATER USE MANAGEMENT PLAN. THEREFORE, ALL NOZZLES ARE TO BE FINE TUNE/ADJUSTED SO THAT OVERSPRAY ONTO HARD SURFACES IS ELIMINATED.
7. OVERHEAD IRRIGATION IS NOT PERMITTED ON SLOPES STEEPER THAN 3:1.
8. VELOCITY SHALL NOT EXCEED 7.5 FPS THROUGH THE WATER METER.
9. NO OVERHEAD IRRIGATION IN AREAS LESS THAN 10 FEET WIDE.
10. THERE IS TO BE NEITHER PLANT MATERIAL NOR IRRIGATION IN AREAS LESS THAN 4 FEET WIDE.
11. ALL SPRINKLER HEADS TO BE ADJUSTED TO MINIMIZE/ELIMINATE OVER SPRAY ON TO HARD SURFACES OR UNINTENDED AREAS. PER TOWN OF CASTLE ROCK WATER USE MANAGEMENT PLAN WATER WASTE IS NOT ALLOWED
12. OVERHEAD IRRIGATION IN AREAS LESS THAN 10' IN WIDTH OR INSTALLED ON SLOPES EQUAL TO OR STEEPER THAN 3:1 WILL NOT BE APPROVED BY TOWN OF CASTLE ROCK INSPECTORS.
13. ALL IRRIGATION INSTALLATIONS MUST MEET TOWN OF CASTLE ROCK DETAILS
14. IRRIGATION EXEMPTION MUST BE OBTAINED FROM THE CASTLE ROCK WATER IF IRRIGATING THE NATIVE SEED OR THE SOD ON A DAILY BASIS FOR ESTABLISHMENT DURING THE MONTHS OF MAY. JUNE, AUGUST AND SEPTEMBER.
15. IRRIGATION EXEMPTIONS WILL NOT BE ISSUED DURING THE MONTH OF JULY. IRRIGATION SYSTEMS MUST BE DESIGNED TO OPERATE WITHIN THE TOWN OF CASTLE ROCK WATER USE MANAGEMENT PLAN. CURRENT COMMERCIAL HOURS OF OPERATION ARE A THREE FIXED DAYS A WEEK FROM 10 PM TO 6 AM.
16. IRRIGATION SYSTEMS ARE TO BE WINTERIZED ANNUALLY IN THE FALL.
17. A COPY OF THE STAMPED AND TOWN APPROVED IRRIGATION PLANS IS TO BE AVAILABLE ON-SITE DURING IRRIGATION INSPECTIONS.

IRRIGATION SCHEDULE

SYMBOL	DESCRIPTION	MODEL NO. DESCRIPTION	DETAIL # AND SHEET	
IRC	IRRIGATION POINT OF CONNECTION	**3/4" DEDICATED IRRIGATION STUB** REFER TO CIVIL, UTILITY, AND WATER PLANS	NA	NA
C	IRRIGATION CONTROLLER	**RAIN BIRD ESP4ME3 + LNK2WIFI WIFI MODULE** 120VAC POWER REQUIRED - SEE PLANS FOR LOCATION(S)	1	27
	RAIN SENSOR	**RAIN BIRD WR2-RFC** REFER TO CONTROLLER NOTES	2	27
	MANUAL DRAIN VALVE	**MATCO-NORCA 3/4" 201X** INSTALLED IN AEP 910L-1G2G VALVE BOX	3	27
	QUICK COUPLER	**RAIN BIRD 44LRC** INSTALLED IN AEP 910L-1G2G VALVE BOX	4	27
M	MASTER VALVE	**RAIN BIRD 100EFB-CP SERIES** INSTALLED IN AEP 1015-1G2G VALVE BOX	5	27
FS	FLOW SENSOR	**RAIN BIRD UFS-100** WITH SHIELDED COMMUNICATION CABLE BACK TO CONTROLLER, INSTALLED IN AEP 1015-1G2G VALVE BOX	1	28
	ISOLATION GATE VALVE	**MATCO-NORCA 514TX** MATCH LINE SIZE, INSTALLED IN AEP 910L-1G2G VALVE BOX	2	28
	DRIP VALVE ASSEMBLY	**RAIN BIRD XCZ-075-PRF** WITH SCH 40 BALL VALVE, INSTALLED IN AEP 1320-1G2G VALVE BOX, SIZED PER PLAN	3	28
	LATERAL JUNCTION BOX	**OLDCASTLE 1324 POLYMER (H-SERIES)** HEAVY DUTY TRAFFIC RATED WITH BOLT DOWN SOLID COVER	4	28
	SLEEVING	**CLASS 200 PVC** REFER TO SLEEVING NOTES	5	28
	SERVICE LINE	**TYPE K COPPER** SIZE: MATCH POC UNLESS OTHERWISE NOTED	NA	NA
	PVC MAINLINE	**CLASS 200 PVC BE** SIZE: 1-1/2" UNLESS OTHERWISE NOTED	1	29
	DRIP LATERAL	**UV RESISTANT POLYETHYLENE** SIZE: 3/4" MINIMUM UNLESS OTHERWISE NOTED	1	29
	FLUSH END CAP	**SCH. 40 BALL VALVE & RAIN BIRD OPERIND OPERATIONAL INDICATOR** INSTALLED IN AEP 910L-1G2G VALVE BOX	2	29

VALVE CALLOUT

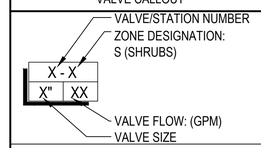

EMITTER SCHEDULE

PLANT TYPE	EMITTER	QTY.	TOTAL GPH
PERENNIAL / GRASSES	0.5 GPH	TWO EACH	1.0 GPH
DECIDUOUS SHRUBS	1.0 GPH	TWO EACH	2.0 GPH
EVERGREEN SHRUBS	1.0 GPH	TWO EACH	2.0 GPH
DECIDUOUS TREE	1.0 GPH	EIGHT EACH	8.0 GPH
EVERGREEN TREE	1.0 GPH	EIGHT EACH	8.0 GPH

EMITTER NOTES

1. ALL PLANT MATERIAL SHALL BE IRRIGATED WITH RAIN BIRD XB SERIES PRESSURE COMPENSATING EMITTERS.
2. EMITTER SCHEDULE IS FOR REFERENCE ONLY. THE CONTRACTOR SHALL ADJUST EMITTER AND NUMBER OF EMITTERS BASED ON THE NEEDS OF INDIVIDUAL PLANTS OR PLANT HYDROZONES.
3. 1/4" DISTRIBUTION TUBING NOT TO EXCEED 8' IN LENGTH.
4. RAIN BIRD DBC-025 DIFFUSER BUG CAP AND TS-025 STAKE ON ALL 1/4" DISTRIBUTION TUBING EMISSION POINTS.
5. REFER TO DRIP IRRIGATION DETAIL 3, SHEET 29

PROFESSIONAL ENGINEER CERTIFICATION

I HEREBY AFFIRM THAT THESE FINAL CONSTRUCTION PLANS WERE PREPARED UNDER MY DIRECT SUPERVISION, IN ACCORDANCE WITH ALL APPLICABLE TOWN OF CASTLE ROCK AND STATE OF COLORADO STANDARDS AND STATUTES, RESPECTIVELY; AND THAT I AM FULLY RESPONSIBLE FOR ALL DESIGN AND REVISIONS RELATIVE TO SAID PLANS.

STEPHEN M. DOUGLAS, P.E.
REGISTERED LICENSED PROFESSIONAL ENGINEER
STATE OF COLORADO No. 41176
FOR AND ON BEHALF OF
PERSONALIZED ENGINEERING SOLUTIONS, LLC
(720)388-8126

TOWN OF CASTLE ROCK APPROVAL
PLANS ARE HEREBY APPROVED FOR ONE YEAR FROM DATE OF DEVELOPMENT SERVICES APPROVAL

APPROVED BY:

DEVELOPMENT SERVICES

NORTH

0 5 10 20
1 inch = 10 ft. Horizontal

JASON NAUGHTIN 19-3239

DATE	REVISION DESCRIPTION
MAR 14 2025	INITIAL CIVIL CD SUBMITTAL

NORRIS DESIGN
PEOPLE + PLACEMAKING

Drawing Name: PLAN-CITY HOTEL-IRR.dwg
Job Number: CITY HOTEL
Prepared For: WHITE DEVELOPMENT
Designer: SMD | Drafter: SN | Checked: SMD

PES Personalized Engineering Solutions
Personalized Engineering Solutions, LLC
9249 S. Broadway #200-388
Highlands Ranch, CO 80129 720.388.8126
www.pengsolutions.com
Construction Management Civil Engineering Land Planning

CITY HOTEL, CASTLE ROCK
CONSTRUCTION DOCUMENTS
IRRIGATION NOTES & SCHEDULE

Sheet 24 of 29
Date MARCH 2025

PATH: P:\CITY HOTEL - 1355-01-3838\DRAWINGS\CONSTRUCTION DOCUMENTS\PLAN-CITY HOTEL-IRR.DWG
PLOTTED BY: S. DOUGLAS PLOT DATE: 3/14/2025 11:41 AM

Irrigation System Hydraulic Worksheet - POC #1

Project Name:	**City Hotel**	**Date:**	**March 12, 2025**
Project Location:	**Historic City Hotel located at 419 N Perry St, Castle Rock, CO. Irrigation system branches off building water supply line downstream of domestic meter.**		
Prepared by:	**Jason Naughtin**	**Current TOCR Registration #**	19-3239

Tap Size	**0.75 "**	**Source of Pressure**	**Service Line within Water Entry Room**
Static Water Pressure:	**45 psi**		
Hydraulic Grade At Zone:	**N/A**	**Company**	**Norris Design**

	Ft. of Copper		Pipe Size (")		K Copper	Friction Loss (from chart)		Flow-GPM	Loss/Gain
Service Line (stub from Water Entry Room):	5	LF	0.75		K Copper	14.41	/100 FT	5	0.72
Master Valve:			0.75			0.2		5	0.20
Pressure Required at Head:									37
Lateral Allowance:									3.00
Control Valve Allowance:									3.00

Mainline Allowances:

Length of Mainline	Pipe Material	Size		Gals.					
40 LF	CL200BE	1.50	" @	10 GPM	Non-looped	0.22	/100 FT		0.09
	CL200BE	1.50	" @	10 GPM	Looped	0.06	/100 FT		0.00

Elevation:

	Tap elevation	6,200'	High/Low:	6,200'	0.00

Green shading indicates required information you must provide

Total System requirements (PSI)	***44.01***
Available System Pressure (PSI)	***45.00***

Town of Castle Rock provides a minimum of 43 psi

Total irrigated area for tap # 1 is 373 sq. ft.

IRRIGATION CHART - CONTROLLER 'A'

Registered Professional	Jason Naughtin	Registration #	19-3239	Date	03.13.2025
Company Name	Norris Design	Address	1101 Bannock St., Denver, CO 80204		
Phone	303.892.1166	Email	jnaughtin@norris-design.com	Clock Make	Rain Bird	Model	ESP4-ME3

Sequence	Zone	Hydrozone (Very Low <5" Low 5-10" Medium 10-15" High >15")	Plant Type (Turf, Native, Shrubs, Perennials, Trees, Annuals, etc.)	Head Type (Rotors, Sprays, Bubblers, Drip, SDI, etc.)	Nozzle (Nozzle/Emitter size)	App. Rate (inches/hour)	GPM (Per Zone and/or Seq.)	Inches/Month (Average May - September)	Run Time (Minutes/ Month)	Run Time (Minutes Every Third Day)	Water Usage (Gallons per month)
1	A#	Low	Shrubs	Drip	0.5, 1.0 gph	0.60	2.0	2	200	20	400
	1							2			0
							2.00				
2	A#	Low	Shrubs	Drip	0.5, 1.0 gph	0.60	4.0	2	200	20	800
	2							0			0
							4.00				
3	A#	Low	Shrubs	Drip	0.5, 1.0 gph	0.60	2.0	2	200	20	400
	3							0			0
							2.00				
								Total	**600**	**60**	**1600**
									Min/Month	**Min/cycle**	**Gallons/Month**

PROFESSIONAL ENGINEER CERTIFICATION

I HEREBY AFFIRM THAT THESE FINAL CONSTRUCTION PLANS WERE PREPARED UNDER MY DIRECT SUPERVISION, IN ACCORDANCE WITH ALL APPLICABLE TOWN OF CASTLE ROCK AND STATE OF COLORADO STANDARDS AND STATUTES, RESPECTIVELY; AND THAT I AM FULLY RESPONSIBLE FOR ALL DESIGN AND REVISIONS RELATIVE TO SAID PLANS.

STEPHEN M. DOUGLAS, P.E.
REGISTERED LICENSED PROFESSIONAL ENGINEER
STATE OF COLORADO No. 41176
FOR AND ON BEHALF OF
PERSONALIZED ENGINEERING SOLUTIONS, LLC
(720)388-8126

TOWN OF CASTLE ROCK APPROVAL
PLANS ARE HEREBY APPROVED FOR ONE YEAR FROM DATE OF DEVELOPMENT SERVICES APPROVAL

APPROVED BY:

DEVELOPMENT SERVICES

NORTH

0 5 10 20
1 inch = 10 ft. Horizontal

JASON NAUGHTIN 19-3239

DATE	REVISION DESCRIPTION
MAR 14 2025	INITIAL CIVIL CD SUBMITTAL

NORRIS DESIGN
PEOPLE + PLACEMAKING

Drawing Name: PLAN-CITY HOTEL-IRR.dwg
Job Number: CITY HOTEL
Prepared For: WHITE DEVELOPMENT
Designer: SMD | Drafter: SN | Checked: SMD

PES Personalized Engineering Solutions
Personalized Engineering Solutions, LLC
9249 S. Broadway #200-388
Highlands Ranch, CO 80129 720.388.8126
www.pengsolutions.com
Construction Management Civil Engineering Land Planning

CITY HOTEL, CASTLE ROCK
CONSTRUCTION DOCUMENTS
IRRIGATION CHARTS

Sheet 25 of 29
Date MARCH 2025

PATH: P:\CITY HOTEL - 1355-01-3838\DRAWINGS\CONSTRUCTION DOCUMENTS\PLAN-CITY HOTEL-IRR.DWG
PLOTTED BY: S. DOUGLAS PLOT DATE: 3/14/2025 11:41 AM

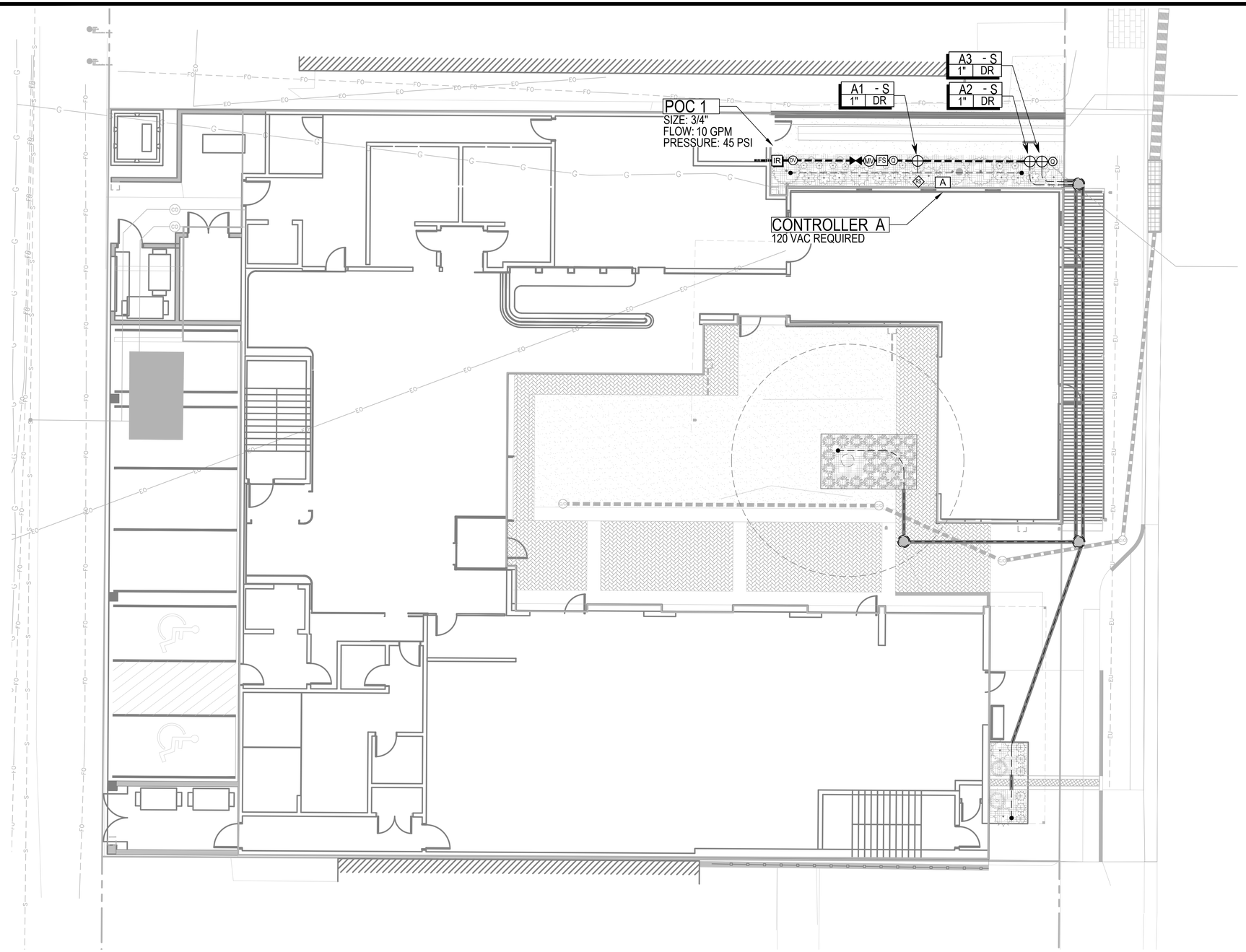

JASON NAUGHTIN 19-3239

811

NORTH

0 4 8 16

SCALE 1/8" =1'-0"

NORTH

0 5 10 20

1 inch = 10 ft. Horizontal

PROFESSIONAL ENGINEER CERTIFICATION

I HEREBY AFFIRM THAT THESE FINAL CONSTRUCTION PLANS WERE PREPARED UNDER MY DIRECT SUPERVISION, IN ACCORDANCE WITH ALL APPLICABLE TOWN OF CASTLE ROCK AND STATE OF COLORADO STANDARDS AND STATUTES, RESPECTIVELY; AND THAT I AM FULLY RESPONSIBLE FOR ALL DESIGN AND REVISIONS RELATIVE TO SAID PLANS.

STEPHEN M. DOUGLAS, P.E.
REGISTERED LICENSED PROFESSIONAL ENGINEER
STATE OF COLORADO No. 41176
FOR AND ON BEHALF OF
PERSONALIZED ENGINEERING SOLUTIONS, LLC
(720)388-8126

TOWN OF CASTLE ROCK APPROVAL
PLANS ARE HEREBY APPROVED FOR ONE YEAR FROM DATE OF DEVELOPMENT SERVICES APPROVAL

APPROVED BY:

DEVELOPMENT SERVICES

DATE	REVISION DESCRIPTION
MAR 14 2025	INITIAL CIVIL CD SUBMITTAL

NORRIS DESIGN
PEOPLE + PLACEMAKING

Drawing Name: PLAN-CITY HOTEL-IRR.dwg			
Job Number: CITY HOTEL			
Prepared For: WHITE DEVELOPMENT	Designer: SMD	Drafter: SN	Checked: SMD

PES Personalized Engineering Solutions
Personalized Engineering Solutions, LLC
9249 S. Broadway #200-388
Highlands Ranch, CO 80129 720.388.8126
www.pengsolutions.com
Construction Management Civil Engineering Land Planning

CITY HOTEL, CASTLE ROCK
CONSTRUCTION DOCUMENTS
IRRIGATION PLAN

Sheet 26 of 29

Date MARCH 2025

PATH: P:\CITY HOTEL - 1355-01-3838\DRAWINGS\CONSTRUCTION DOCUMENTS\PLAN-CITY HOTEL-IRR.DWG
PLOTTED BY: S. DOUGLAS PLOT DATE: 3/14/2025 11:41 AM

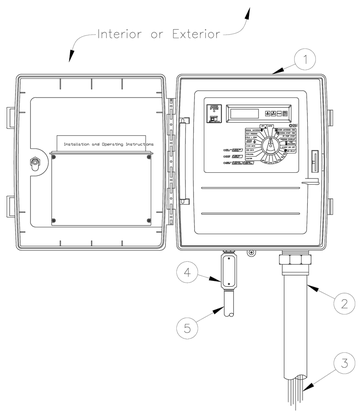

1. CONTROLLER: WALL MOUNT
2. 2-INCH PVC SCH 40 CONDUIT AND FITTINGS
3. WIRES TO CONTROL VALVES
4. JUNCTION BOX
5. 1-INCH PVC SCH 40 CONDUIT AND FITTINGS TO DEDICATED POWER SUPPLY

Sheet Revisions		
Date	Comments	
3/21	STAFF CHANGES	

Town of Castle Rock COLORADO
Town of Castle Rock
100 N. Wilcox St.
Castle Rock, CO 80104
Phone: (720) 733-2200
Fax: (720) 733-2217
Development Services

WEATHER-BASED CONTROLLER: WALL MOUNT

Issued By: Town of Castle Rock, Development Services March 31, 2021

DETAIL PLAN NO. IR-26

Sheet 1 of 1

1 WALL MOUNT CONTROLLER

SCALE: NTS

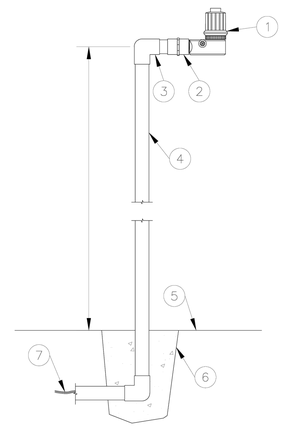

1. RAIN SENSOR
2. FEMALE ADAPTER (SLIP X FIPT)
3. GALVANIZED 90° EL (1 OF 2)
4. 3/4-INCH GALVAVIZED PIPE
5. FINISHED GRADE
6. CONCRETE BASE
7. WIRE TO IRRIGATION CONTROLLER

Sheet Revisions		
Date	Comments	
3/21	STAFF CHANGES	

Town of Castle Rock COLORADO
Town of Castle Rock
100 N. Wilcox St.
Castle Rock, CO 80104
Phone: (720) 733-2200
Fax: (720) 733-2217
Development Services

RAIN / WEATHER SENSOR POLE MOUNT

Issued By: Town of Castle Rock, Development Services March 31, 2021

DETAIL PLAN NO. IR-29

Sheet 1 of 1

2 POLE MOUNT RAIN SENSOR

SCALE: NTS

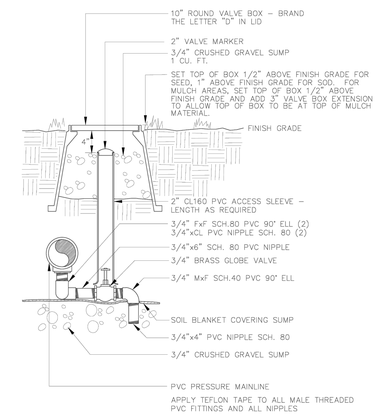

Sheet Revisions		
Date	Comments	

Town of Castle Rock COLORADO
Town of Castle Rock
100 N. Wilcox St.
Castle Rock, CO 80104
Phone: (720) 733-2200
Fax: (720) 733-2217
Development Services

MANUAL DRAIN VALVE

Issued By: Town of Castle Rock, Development Services March 31, 2021

DETAIL PLAN NO. IR-5

Sheet 1 of 1

3 DRAIN VALVE

SCALE: NTS

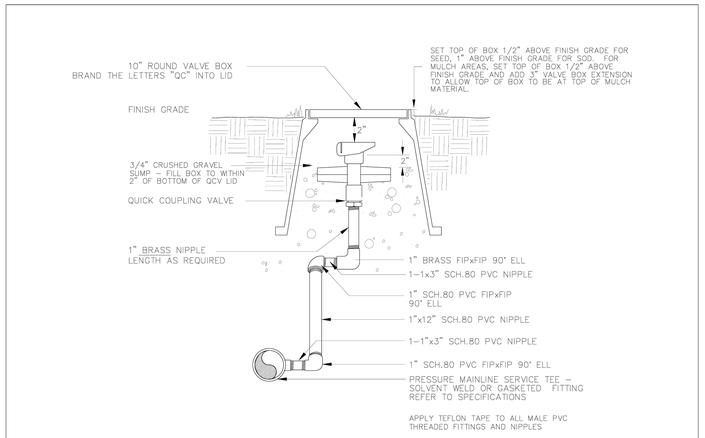

Sheet Revisions		
Date	Comments	

Town of Castle Rock COLORADO
Town of Castle Rock
100 N. Wilcox St.
Castle Rock, CO 80104
Phone: (720) 733-2200
Fax: (720) 733-2217
Development Services

QUICK COUPLING VALVE

Issued By: Town of Castle Rock, Development Services March 31, 2021

DETAIL PLAN NO. IR-6

Sheet 1 of 1

4 QUICK COUPLING VALVE

SCALE: NTS

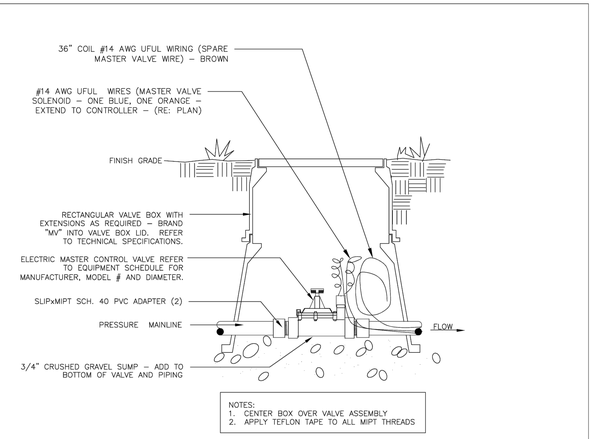

Sheet Revisions		
Date	Comments	
3/21	STAFF CHANGES	

Town of Castle Rock COLORADO
Town of Castle Rock
100 N. Wilcox St.
Castle Rock, CO 80104
Phone: (720) 733-2200
Fax: (720) 733-2217
Development Services

MASTER VALVE

Issued By: Town of Castle Rock, Development Services March 31, 2021

DETAIL PLAN NO. IR-34

SHEET 1 OF 1

5 MASTER VALVE

SCALE: NTS

PROFESSIONAL ENGINEER CERTIFICATION

I HEREBY AFFIRM THAT THESE FINAL CONSTRUCTION PLANS WERE PREPARED UNDER MY DIRECT SUPERVISION, IN ACCORDANCE WITH ALL APPLICABLE TOWN OF CASTLE ROCK AND STATE OF COLORADO STANDARDS AND STATUTES, RESPECTIVELY; AND THAT I AM FULLY RESPONSIBLE FOR ALL DESIGN AND REVISIONS RELATIVE TO SAID PLANS.

STEPHEN M. DOUGLAS, P.E.
REGISTERED LICENSED PROFESSIONAL ENGINEER
STATE OF COLORADO No. 41176
FOR AND ON BEHALF OF
PERSONALIZED ENGINEERING SOLUTIONS, LLC
(720)388-8126

TOWN OF CASTLE ROCK APPROVAL
PLANS ARE HEREBY APPROVED FOR ONE YEAR FROM DATE OF DEVELOPMENT SERVICES APPROVAL

APPROVED BY:

DEVELOPMENT SERVICES

NORTH

0 5 10 20
1 inch = 10 ft. Horizontal

JASON NAUGHTIN 19-3239

DATE	REVISION DESCRIPTION
MAR 14 2025	INITIAL CIVIL CD SUBMITTAL

NORRIS DESIGN
PEOPLE + PLACEMAKING

Drawing Name: PLAN-CITY HOTEL-IRR.dwg
Job Number: CITY HOTEL
Prepared For: WHITE DEVELOPMENT
Designer: SMD | Drafter: SN | Checked: SMD

PES Personalized Engineering Solutions
Personalized Engineering Solutions, LLC
9249 S. Broadway #200-388
Highlands Ranch, CO 80129 720.388.8126
www.pengsolutions.com
Construction Management Civil Engineering Land Planning

CITY HOTEL, CASTLE ROCK
CONSTRUCTION DOCUMENTS
IRRIGATION DETAILS

Sheet 27 of 29
Date MARCH 2025

PATH: P:\CITY HOTEL - 1355-01-3838\DRAWINGS\CONSTRUCTION DOCUMENTS\PLAN-CITY HOTEL-IRR.DWG
PLOTTED BY: S. DOUGLAS PLOT DATE: 3/14/2025 11:42 AM

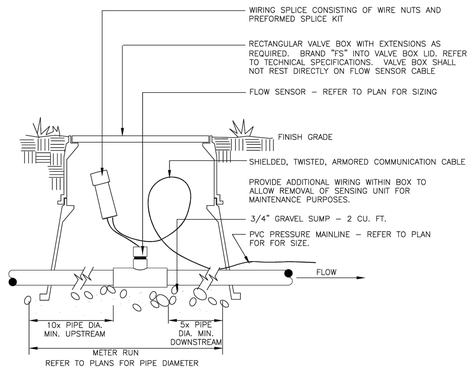

NO FITTINGS INCLUDING REDUCER BUSHINGS, TEES, ELLS, ETC, SHALL BE INSTALLED WITHIN "METER RUN" DISTANCE.

DIAMETER OF FLOW SENSOR TEE AND "METER RUN" PIPING SHALL BE EQUAL. NO REDUCER BUSHINGS, ADAPTERS, ETC. SHALL BE INSTALLED WITHIN FLOW SENSOR TEE.

Sheet Revisions	
Date	Comments

Town of Castle Rock
100 N. Wilcox St.
Castle Rock, CO 80104
Phone: (720) 733-2200
Fax: (720) 733-2217
Development Services

FLOW SENSOR

Issued By: Town of Castle Rock, Development Services March 31, 2021

DETAIL PLAN NO.
IR-33
SHEET 1 OF 1

1 FLOW SENSOR

SCALE: NTS

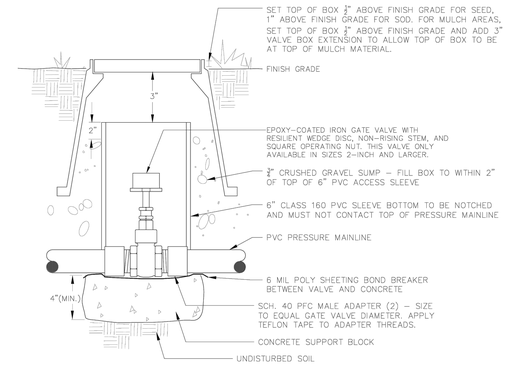

NOTE: POLY SHEETING AND CONCRETE SUPPORT BLOCK SHALL BE INSTALLED AT GATE VALVES 3" DIAMETER AND LARGER

Sheet Revisions	
Date	Comments
3/21	STAFF CHANGES

Town of Castle Rock
100 N. Wilcox St.
Castle Rock, CO 80104
Phone: (720) 733-2200
Fax: (720) 733-2217
Development Services

GATE VALVE

Issued By: Town of Castle Rock, Development Services March 31, 2021

DETAIL PLAN NO.
IR-7
Sheet 1 of 1

2 GATE VALVE

SCALE: NTS

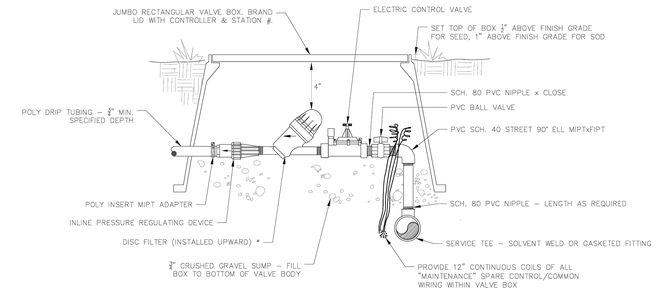

NOTES:
1. DIAMETERS OF BALL VALVES, FITTINGS, NIPPLES, FILTERS, AND PRESSURE REGULATORS SHALL EQUAL ELECTRIC CONTROL VALVE DIAMETER.
2. * WYE FILTER MAY BE USED IN PLACE OF DISC FILTER FOR TRADITIONAL POINT/SOURCE DRIP INSTALLATIONS.
3. VALVE BOXES SHALL BE INSTALLED PARALLEL OR PERPENDICULAR TO ADJACENT SIDEWALKS AND HARD SURFACES WHERE APPLICABLE.

Sheet Revisions	
Date	Comments
3/21	STAFF CHANGES

Town of Castle Rock
100 N. Wilcox St.
Castle Rock, CO 80104
Phone: (720) 733-2200
Fax: (720) 733-2217
Development Services

DRIP / SUB-SURFACE VALVE ASSEMBLY

Issued By: Town of Castle Rock, Development Services March 31, 2021

DETAIL PLAN NO.
IR-18
Sheet 1 of 1

3 DRIP VALVE ASSEMBLY

SCALE: NTS

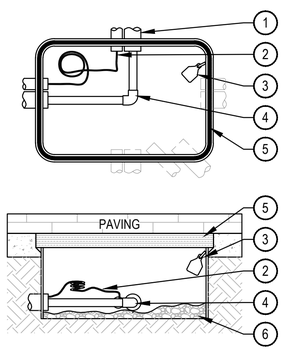

1. 1-1/2" CLASS 200 PVC SLEEVES, QUANTITY AS REQUIRED
2. IRRIGATION CONTROL WIRE PATH, LOOP 3' WITHIN EACH JUNCTION BOX OR CHANGE IN DIRECTION
3. SECURE CHRISTY ID TAG WITH NYLON ZIP TIE & LABEL
4. IRRIGATION LATERAL, LOCATE TEE OR EL AT CENTER OF BOX
5. OLD CASTLE RECTANGULAR POLYMER CONCRETE H-SERIES 2436 JUNCTION BOX, INSTALL FLUSH WITH BOTTOM OF PAVERS
6. 3/4" GRAVEL SUMP / COMPACTED SUBGRADE

NOTES:
1. CHISEL 'X' INTO PAVERS DIRECTLY OVER THE CENTER OF JUNCTION BOX
2. COORDINATE LOCATION OF JUNCTION BOX AND OBTAIN OWNER APPROVAL BEFORE CONSTRUCTION.
3. CONTRACTOR SHALL INSTALL JUNCTION BOXES ACCORDING TO MANUFACTURERS SPECIFICATIONS TO ENSURE TIER-22 RATING

4 LATERAL JUNCTION BOX ASSEMBLY

NTS

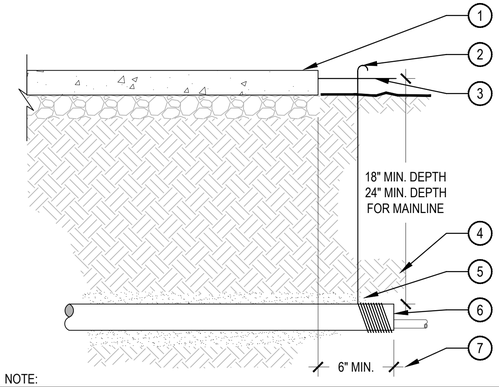

1. PAVING
2. WRAP 12 GAUGE GALVANIZED WIRE AROUND EACH END OF SLEEVE (10 WRAPS MIN.) AND EXTEND TO SURFACE AS A LOCATING DEVICE
3. FINISH GRADE / TOP OF DG
4. COMPACT SOIL AROUND SLEEVE TO SAME DENSITY AS ADJACENT UNDISTURBED SOIL
5. WASHED AND GRADED MORTAR SAND BACKFILL IN ROCKY SOIL CONDITIONS
6. PVC SLEEVE PER SCHEDULE, TWICE DIAMETER OF THE SUM OF THE PIPES/ WIRES
7. EXTEND SLEEVES 6" BEYOND EDGES OF PAVING

NOTE:
1. ALL SLEEVES SHALL BE INSPECTED PRIOR TO BACKFILLING.
2. CAP SLEEVES UNTIL USE.
3. MULTIPLE SLEEVES REQUIRE 4" HORIZONTAL SEPARATION WITHIN SAME SLEEVE TRENCH.
4. IRRIGATION PIPE AND WIRE SHALL NOT SHARE THE SAME SLEEVE.
5. MARK / STAMP - 'X' AND/OR INSTALL PLACARD AT BACK OF CURB.

5 PIPE SLEEVE

SCALE: NTS

PROFESSIONAL ENGINEER CERTIFICATION

I HEREBY AFFIRM THAT THESE FINAL CONSTRUCTION PLANS WERE PREPARED UNDER MY DIRECT SUPERVISION, IN ACCORDANCE WITH ALL APPLICABLE TOWN OF CASTLE ROCK AND STATE OF COLORADO STANDARDS AND STATUTES, RESPECTIVELY; AND THAT I AM FULLY RESPONSIBLE FOR ALL DESIGN AND REVISIONS RELATIVE TO SAID PLANS.

STEPHEN M. DOUGLAS, P.E.
REGISTERED LICENSED PROFESSIONAL ENGINEER
STATE OF COLORADO No. 41176
FOR AND ON BEHALF OF
PERSONALIZED ENGINEERING SOLUTIONS, LLC
(720)388-8126

NORTH

0 5 10 20
1 inch = 10 ft. Horizontal

TOWN OF CASTLE ROCK APPROVAL
PLANS ARE HEREBY APPROVED FOR ONE YEAR FROM DATE OF DEVELOPMENT SERVICES APPROVAL

APPROVED BY:

DEVELOPMENT SERVICES

JASON NAUGHTIN 19-3239

DATE	REVISION DESCRIPTION
MAR 14 2025	INITIAL CIVIL CD SUBMITTAL

NORRIS DESIGN
PEOPLE + PLACEMAKING

Drawing Name: PLAN-CITY HOTEL-IRR.dwg
Job Number: CITY HOTEL
Prepared For: WHITE DEVELOPMENT
Designer: SMD | Drafter: SN | Checked: SMD

PES Personalized Engineering Solutions
Personalized Engineering Solutions, LLC
9249 S. Broadway #200-388
Highlands Ranch, CO 80129 720.388.8126
www.pengsolutions.com
Construction Management Civil Engineering Land Planning

CITY HOTEL, CASTLE ROCK
CONSTRUCTION DOCUMENTS
IRRIGATION DETAILS

Sheet 28 of 29
Date MARCH 2025

PATH: P:\CITY HOTEL - 1355-01-3838\DRAWINGS\CONSTRUCTION DOCUMENTS\PLAN-CITY HOTEL-IRR.DWG
PLOTTED BY: S. DOUGLAS PLOT DATE: 3/14/2025 11:43 AM

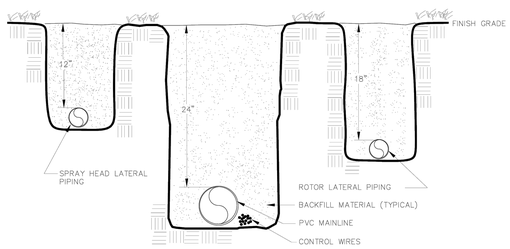

Sheet Revisions			
Date	Comments		

Town of Castle Rock
100 N. Wilcox St.
Castle Rock, CO 80104
Phone: (720) 733-2200
Fax: (720) 733-2217
Development Services

MAIN LINE & LATERAL TRENCH

Issued By: Town of Castle Rock, Development Services March 31, 2021

DETAIL PLAN NO.
IR-21
Sheet 1 of 1

1 IRRIGATION TRENCH

SCALE: NTS

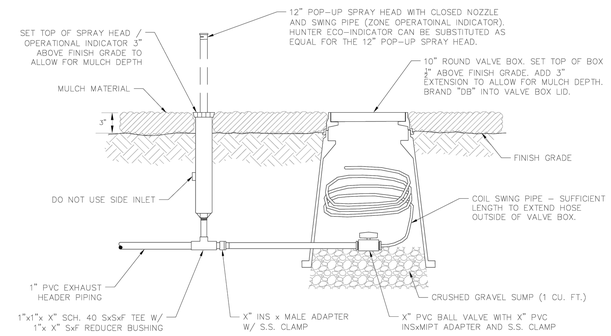

Sheet Revisions			
Date	Comments		
3/21	STAFF CHANGES		

Town of Castle Rock
100 N. Wilcox St.
Castle Rock, CO 80104
Phone: (720) 733-2200
Fax: (720) 733-2217
Development Services

DRIPPERLINE FLUSH-OUT & OPERATIONAL INDICATOR

Issued By: Town of Castle Rock, Development Services March 31, 2021

DETAIL PLAN NO.
IR-32
Sheet 1 of 1

2 FLUSH VALVE W/ OPERATIONAL INDICATOR

SCALE: NTS

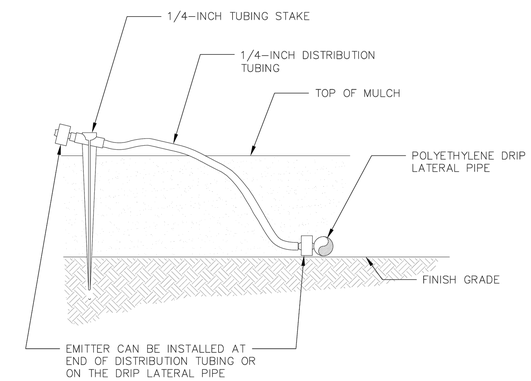

Sheet Revisions			
Date	Comments		
3/21	STAFF CHANGES		

Town of Castle Rock
100 N. Wilcox St.
Castle Rock, CO 80104
Phone: (720) 733-2200
Fax: (720) 733-2217
Development Services

DRIP EMITTER ON STAKE

Issued By: Town of Castle Rock, Development Services March 31, 2021

DETAIL PLAN NO.
IR-25
Sheet 1 of 1

3 DRIP EMITTER

SCALE: NTS

PROFESSIONAL ENGINEER CERTIFICATION

I HEREBY AFFIRM THAT THESE FINAL CONSTRUCTION PLANS WERE PREPARED UNDER MY DIRECT SUPERVISION, IN ACCORDANCE WITH ALL APPLICABLE TOWN OF CASTLE ROCK AND STATE OF COLORADO STANDARDS AND STATUTES, RESPECTIVELY; AND THAT I AM FULLY RESPONSIBLE FOR ALL DESIGN AND REVISIONS RELATIVE TO SAID PLANS.

STEPHEN M. DOUGLAS, P.E.
REGISTERED LICENSED PROFESSIONAL ENGINEER
STATE OF COLORADO No. 41176
FOR AND ON BEHALF OF
PERSONALIZED ENGINEERING SOLUTIONS, LLC
(720)388-8126

TOWN OF CASTLE ROCK APPROVAL
PLANS ARE HEREBY APPROVED FOR ONE YEAR FROM DATE OF DEVELOPMENT SERVICES APPROVAL

APPROVED BY:

DEVELOPMENT SERVICES

NORTH

0 5 10 20
1 inch = 10 ft. Horizontal

JASON NAUGHTIN 19-3239

DATE	REVISION DESCRIPTION
MAR 14 2025	INITIAL CIVIL CD SUBMITTAL

NORRIS DESIGN
PEOPLE + PLACEMAKING

Drawing Name: PLAN-CITY HOTEL-IRR.dwg
Job Number: CITY HOTEL
Prepared For: WHITE DEVELOPMENT
Designer: SMD
Drafter: SN
Checked: SMD

PES Personalized Engineering Solutions
Personalized Engineering Solutions, LLC
9249 S. Broadway #200-388
Highlands Ranch, CO 80129 720.388.8126
www.pengsolutions.com
Construction Management Civil Engineering Land Planning

CITY HOTEL, CASTLE ROCK
CONSTRUCTION DOCUMENTS
IRRIGATION DETAILS

Sheet 29 of 29
Date MARCH 2025

PATH: P:\CITY HOTEL - 1355-01-3838\DRAWINGS\CONSTRUCTION DOCUMENTS\PLAN-CITY HOTEL-IRR.DWG
PLOTTED BY: S. DOUGLAS PLOT DATE: 3/14/2025 11:43 AM